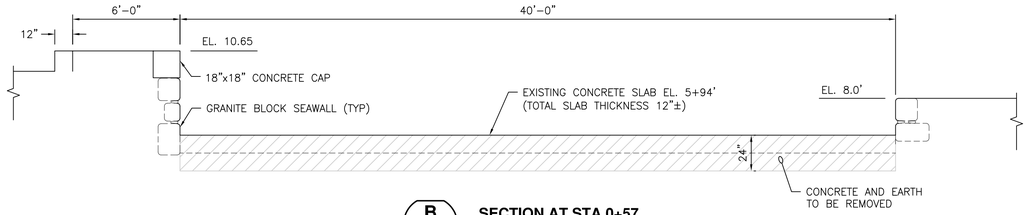

B 2 3 **SECTION AT STA 0+57**
SCALE: 1/4"=1'-0"

1/4"=1'-0" 4 0 4 8 SCALE IN FEET

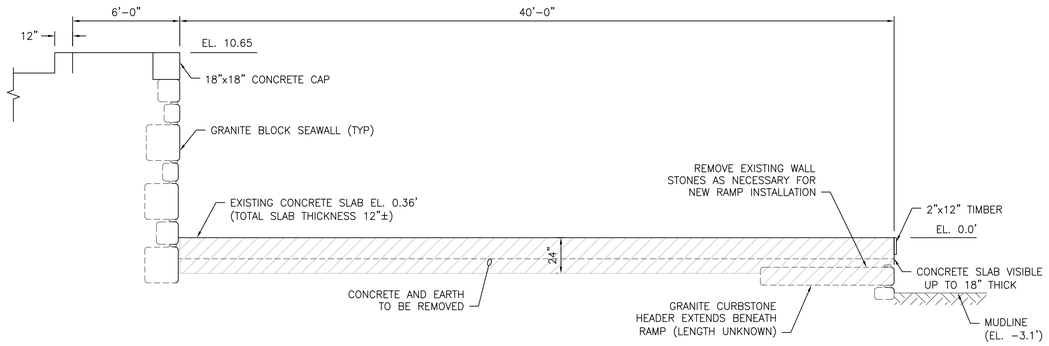

C 2 3 **SECTION AT STA 1+17**
SCALE: 1/4"=1'-0"

1/4"=1'-0" 4 0 4 8 SCALE IN FEET

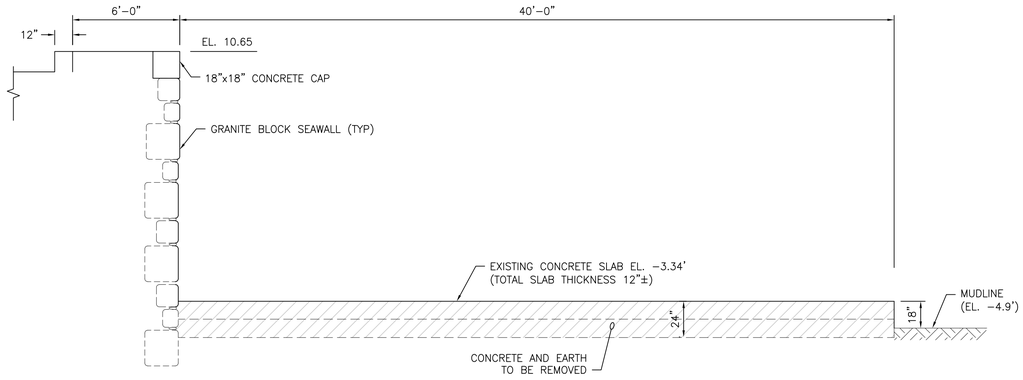

D 2 3 **SECTION AT STA 1+52**
SCALE: 1/4"=1'-0"

1/4"=1'-0" 4 0 4 8 SCALE IN FEET

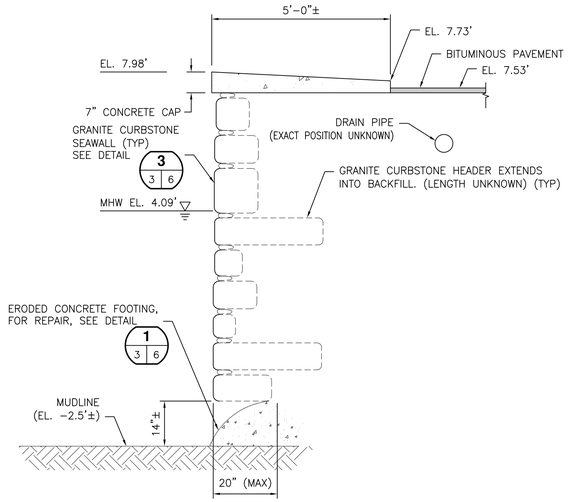

E 2 3 **SECTION AT STA 0+24**
SCALE: 1/2"=1'-0"

1/2"=1'-0" 2 0 2 4 SCALE IN FEET

PRELIMINARY
FOR REVIEW ONLY

CHILDS ENGINEERING CORPORATION
34 WILLIAM WAY, BELLINGHAM, MA 02019 U.S.A.
Phone: (508) 966-9092 Fax: (508) 966-9096
E-mail: mail@childseng.com

Mark	Description	Date	Appr.

Designed by: FAR
Date: 01/28/16
Dwn by: TEQ
Ckd by: FAR
Design file no. 259115 X-103
Reviewed by: DLP
Scale: AS NOTED

NAHANT BOAT RAMP
TOWN OF NAHANT
NAHANT, MA

EXISTING SECTIONS

Sheet reference number:
X-103
Sheet 3 of 6

TOM QUINN K:\2591-15.00 NAHANT BOATRAMP\CADD\CURRENT WORKING DWGS\259115 X-103 EXISTING SECTIONS.DWG Jan 28, 2016 - 9:52am