Stantec

Town of Nahant, MA

Site Design for Nahant Life Saving Station
Nahant, Massachusetts

OCTOBER 07, 2011

Project Number: 210800789

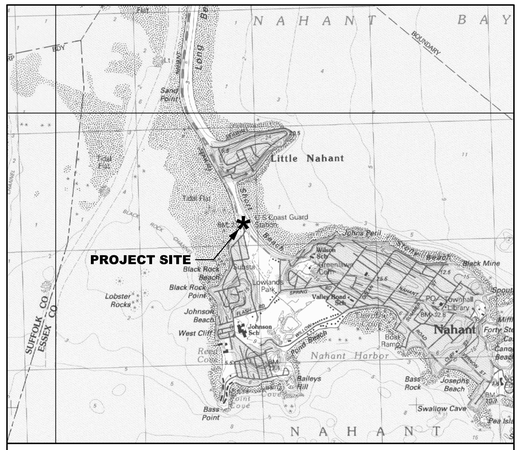

DRAWING INDEX

L100	EXISTING CONDITIONS PLAN
L101	SITE PREPARATION AND DEMOLITION PLAN
L102	LAYOUT AND MATERIALS PLAN
L103	GRADING AND DRAINAGE PLAN
L104	PLANTING PLAN
L501	SITE DETAILS
L502	SITE DETAILS
L503	SITE DETAILS
L504	SITE DETAILS
L505	SITE DETAILS

Revision	By	Appd.	YY.MM.DD
CONTRACTOR PRICING SET	CF	RH	11.10.07
Issued	By	Appd.	YY.MM.DD
File Name: Cover.dwg	CF/JF	RH	RH	11.10.07
	Dwn.	Chkd.	Dsgn.	YY.MM.DD

Flood Zones

Bench Mark elevations are based on a U.S.C.S. Disk numbered RM 2 located in front of the former Coast Guard Station. Elevation = 8.71.

Mean Tide elevations are those at Commonwealth Pier #5.

Mean High Tide Elevation = +4.58'.
Mean Tide Elevation = −0.13'.
Mean Low Tide Elevation = −4.84'.

Flood elevations are taken from FIRM map #250095 0004 B dated September 28, 1984.
Zone C "Area of minimal flooding".
Zone V1-V30 "Areas of 100 year coastal flood with velocity (wave action); base flood elevations and flood hazard factors determined".

EXISTING CONDITIONS NOTES

1. THE TOPOGRAPHY, PROPERTY LINES, SITE DETAIL & SURFACE IMPROVEMENTS DEPICTED HEREON WERE OBTAINED FROM A PLAN ENTITLED "EXISTING CONDITIONS FORMER U.S. GOV. LIFE SAVING STATION" 96 NAHANT ROAD, PREPARED FOR THE TOWN OF NAHANT BY RYAN ENGINEERING CORP. DATED JULY 9, 1999. MERIDIAN ASSOCIATES, INC. (MAI) PERFORMED A LIMITED INSTRUMENT SURVEY ON THE GROUND ON MARCH 13, 2007 TO OBTAIN BUILDING ELEVATIONS, NEW UTILITIES AND SET TEMPORARY BENCHMARKS.

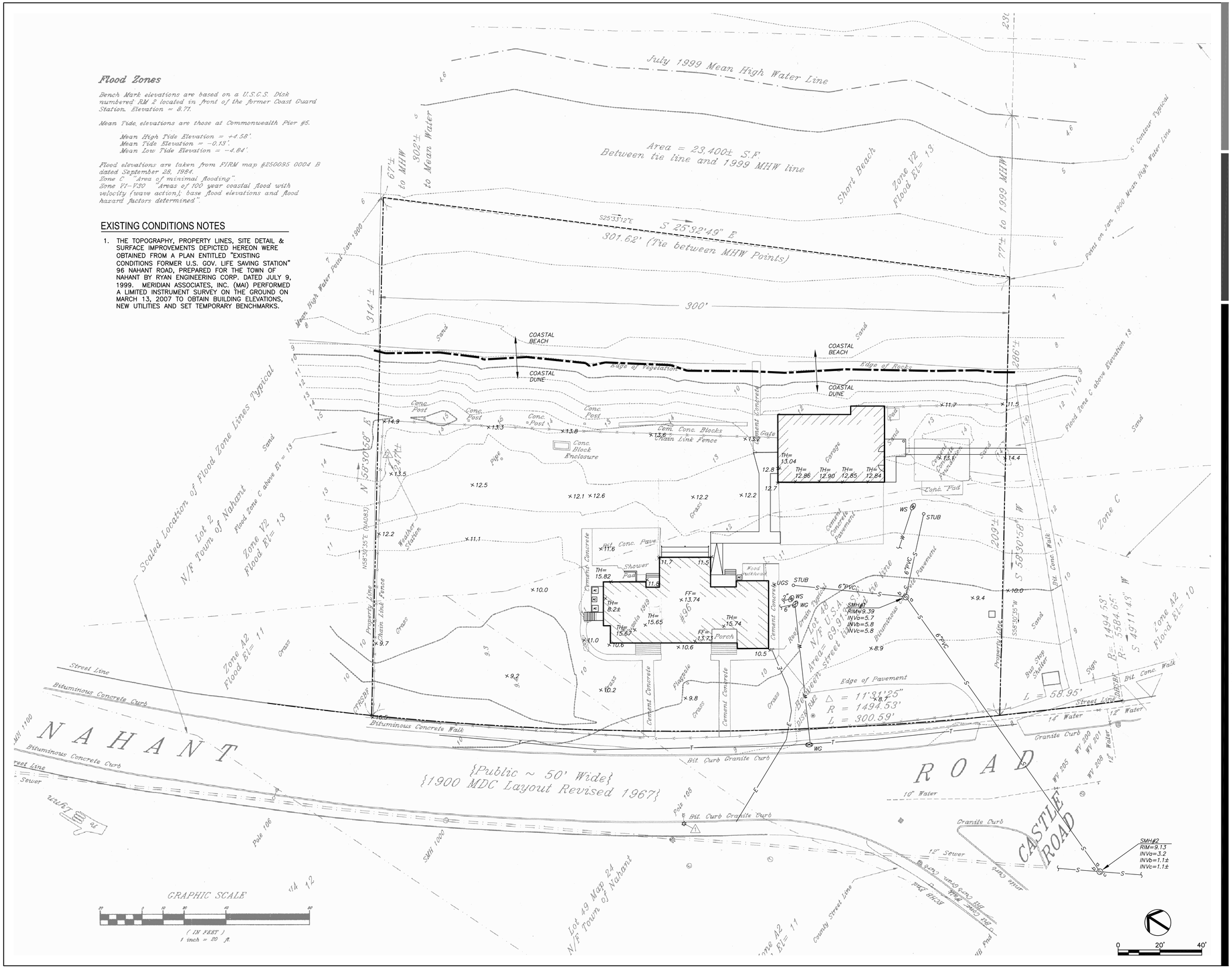

Stantec

Stantec Planning and Landscape Architecture P.C.
141 Portland St.
Boston MA U.S.A.
02114
Tel. 617.523.8103
Fax. 617.523.4333
www.stantec.com

Copyright Reserved

The Contractor shall verify and be responsible for all dimensions. DO NOT scale the drawing — any errors or omissions shall be reported to Stantec without delay.
The Copyrights to all designs and drawings are the property of Stantec. Reproduction or use for any purpose other than that authorized by Stantec is forbidden.

Revision	By	Appd.	YY.MM.DD
CONTRACTOR PRICING SET	CF	RH	11.10.07

Issued	By	Appd.	YY.MM.DD
File Name: 00789I-100.dwg	CF/JF	RH	RH	11.10.07
	Dwn.	Chkd.	Dsgn.	YY.MM.DD

Permit-Seal

Client/Project

TOWN OF NAHANT, MA

Site Design for Nahant Life Saving Station

Nahant, Massachusetts

Title

EXISTING CONDITIONS PLAN

Project No. 210800789

Scale 1"=20'-0"

Drawing No.

L100

SITE PREPARATION AND DEMOLITION NOTES

1. THE TOPOGRAPHY, PROPERTY LINES, SITE DETAIL & SURFACE IMPROVEMENTS DEPICTED HEREON WERE OBTAINED FROM A PLAN ENTITLED "EXISTING CONDITIONS FORMER U.S. GOV. LIFE SAVING STATION" 96 NAHANT ROAD, PREPARED FOR THE TOWN OF NAHANT BY RYAN ENGINEERING CORP. DATED JULY 9, 1999. MERIDIAN ASSOCIATES, INC. (MAI) PERFORMED A LIMITED INSTRUMENT SURVEY ON THE GROUND ON MARCH 13, 2007 TO OBTAIN BUILDING ELEVATIONS, NEW UTILITIES AND SET TEMPORARY BENCHMARKS.
2. CONTRACTOR SHALL NOT STORE OR STOCKPILE EQUIPMENT OR MATERIALS UNDER TREES.
3. CONTRACTOR SHALL INSTALL TEMPORARY CONSTRUCTION FENCE AS REQUIRED.
4. MATERIALS DESIGNATED FOR REMOVAL SHALL BE DISPOSED OF IN A LEGAL MANNER.
5. ANY UNSCHEDULED DISTURBANCE OR DAMAGE SHALL BE REPAIRED PROMPTLY BY CONTRACTOR AT NO ADDITIONAL COST TO THE OWNER.
6. ALL PAVEMENTS TO BE REMOVED SHALL BE SAWCUT ADJACENT TO EXISTING PAVEMENTS SCHEDULED TO REMAIN.
7. REFER TO LAYOUT PLAN FOR LOCATIONS AND DIMENSIONS OF PROPOSED IMPROVEMENTS.

TEMPORARY BENCHMARK CHART

T.B.M.#	DESCRIPTION	ELEVATION
1	SQUARE-CUT SET IN LIGHT POLE BASE	9.51
2	SQUARE-CUT SET IN WEATHER STATION BASE	13.84

LEGEND

- R&D EXISTING ASPHALT/GRAVEL PAVEMENT
- R&D EXISTING CEMENT CONCRETE PAVEMENT
- REMOVE & STOCKPILE FOR REUSE EXISTING GRANITE CURB
- REMOVE & DISPOSE EXISTING CHAINLINK FENCE
- REMOVE & RESET EXISTING POST & RAIL FENCE
- SILTATION BARRIER
- ORANGE CONSTRUCTION FENCE
- CONSTRUCTION ENTRANCE
- CATCHBASIN WITH SILTSACK PROTECTION

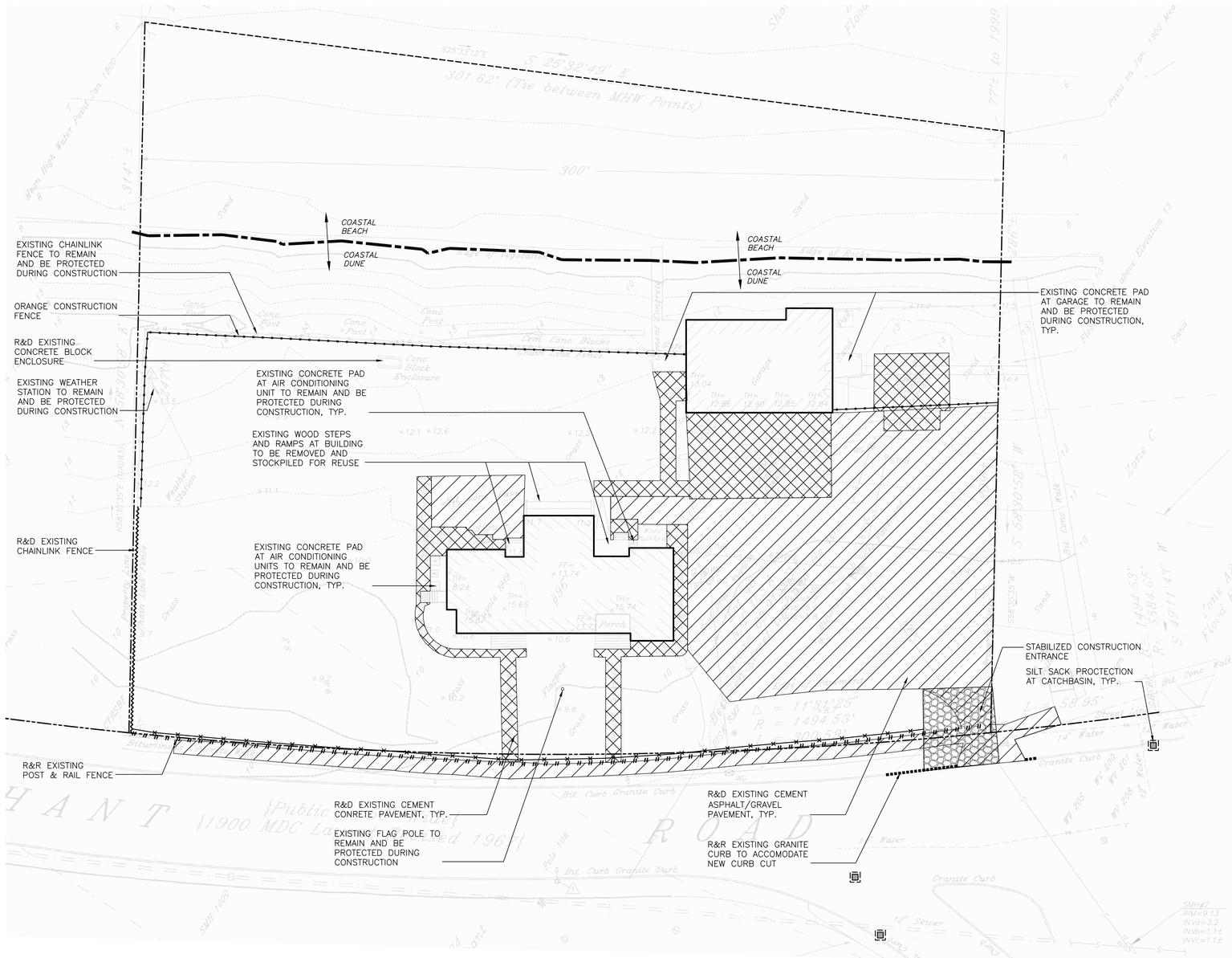

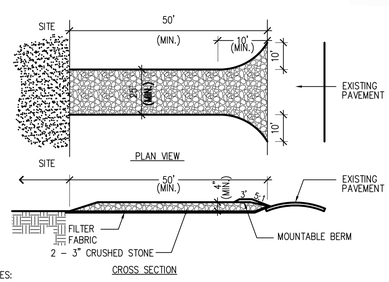

NOTES:

1. ENTRANCE WIDTH SHALL BE A TWENTY-FIVE (25) FOOT MINIMUM, BUT NOT LESS THAN THE FULL WIDTH AT POINTS WHERE INGRESS OR EGRESS OCCURS.
2. THE ENTRANCE SHALL BE MAINTAINED IN A CONDITION WHICH SHALL PREVENT TRACKING OR FLOWING OF SEDIMENT ONTO PUBLIC RIGHTS-OF-WAY. THIS MAY REQUIRE PERIODIC TOP DRESSING WITH ADDITIONAL STONE AS CONDITIONS DEMAND AND REPAIR OR CLEANOUT OF ANY MEASURES USED TO TRAP SEDIMENT. ALL SEDIMENT SPILLED, DROPPED, WASHED OR TRACKED ONTO PUBLIC RIGHTS-OF-WAY MUST BE REMOVED IMMEDIATELY. BERM SHALL BE PERMITTED. PERIODIC INSPECTION AND MAINTENANCE SHALL BE PROVIDED AS NEEDED.

1 STABILIZED CONSTRUCTION ENTRANCE

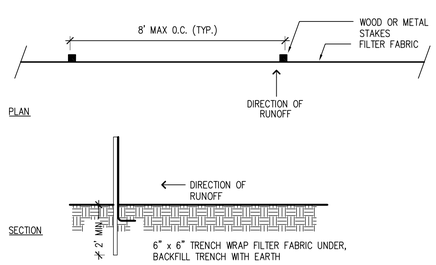

2 SILTATION BARRIER

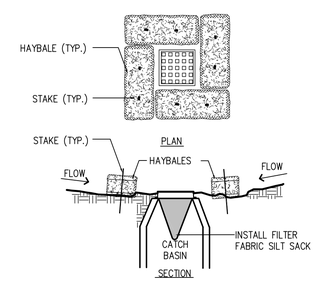

3 CATCH BASIN PROTECTION

ORIGINAL SHEET – ARCH D

Stantec

Stantec Planning and Landscape Architecture P.C.
141 Portland St.
Boston MA U.S.A.
02114
Tel. 617.523.8103
Fax. 617.523.4333
www.stantec.com

Copyright Reserved

The Contractor shall verify and be responsible for all dimensions. DO NOT scale the drawing – any errors or omissions shall be reported to Stantec without delay.
The Copyrights to all designs and drawings are the property of Stantec. Reproduction or use for any purpose other than that authorized by Stantec is forbidden.

Revision	By	Appd.	YY.MM.DD
CONTRACTOR PRICING SET	CF	RH	11.10.07

Issued	By	Appd.	YY.MM.DD
File Name: 00789I-101.dwg	CF/JF	RH	RH	11.10.07
	Dwn.	Chkd.	Dsgn.	YY.MM.DD

Permit-Seal

Client/Project

TOWN OF NAHANT, MA

Site Design for Nahant Life Saving Station

Nahant, Massachusetts

Title

SITE PREPARATION AND DEMOLITION PLAN

Project No. 210800789

Scale 1"=20'-0"

Drawing No. L101

LAYOUT AND MATERIALS NOTES

1. THE TOPOGRAPHY, PROPERTY LINES, SITE DETAIL & SURFACE IMPROVEMENTS DEPICTED HEREON WERE OBTAINED FROM A PLAN ENTITLED "EXISTING CONDITIONS FORMER U.S. GOV. LIFE SAVING STATION" 96 NAHANT ROAD, PREPARED FOR THE TOWN OF NAHANT BY RYAN ENGINEERING CORP. DATED JULY 9, 1999. MERIDIAN ASSOCIATES, INC. (MAI) PERFORMED A LIMITED INSTRUMENT SURVEY ON THE GROUND ON MARCH 13, 2007 TO OBTAIN BUILDING ELEVATIONS, NEW UTILITIES AND SET TEMPORARY BENCHMARKS.
2. STAGING AREAS SHALL BE COORDINATED WITH OWNER.
3. CONTRACTOR SHALL NOT STORE/STOCKPILE MATERIALS WITHIN DUNE AREAS.
4. MATERIALS SHALL BE HANDLED, STORED, INSTALLED, CLEANED, AND PROTECTED IN ACCORDANCE WITH BEST PRACTICE IN THE INDUSTRY AND, EXCEPT WHERE OTHERWISE SPECIFIED IN THE CONTRACT DOCUMENTS, IN ACCORDANCE WITH MANUFACTURER'S SPECIFICATIONS AND DIRECTIONS.
5. THE CONTRACTOR SHALL VERIFY ALL EXISTING CONDITIONS AND DIMENSIONS IN THE FIELD AND REPORT ANY DISCREPANCIES BETWEEN PLANS AND ACTUAL CONDITIONS TO THE OWNER'S REPRESENTATIVE PRIOR TO STARTING WORK.
6. THE CONTRACTOR IS RESPONSIBLE FOR ANY DAMAGE TO EXISTING CONDITIONS TO REMAIN THAT ARE DUE TO CONTRACTOR OPERATIONS.
7. ALL ITEMS TO BE REMOVED THAT ARE NOT STOCKPILED FOR LATER REUSE ON THE PROJECT OR DELIVERED TO THE OWNER SHALL BE LEGALLY DISPOSED OF OFF SITE BY THE CONTRACTOR.
8. THE LOCATIONS OF UNDERGROUND UTILITIES SHOWN HAVE NOT BEEN INDEPENDENTLY VERIFIED BY THE OWNER OR ITS REPRESENTATIVE. THE CONTRACTOR SHALL CONTACT DIGSAFE AND THE PROPER LOCAL AUTHORITIES OR RESPECTIVE UTILITY COMPANIES TO CONFIRM THE LOCATION OF ALL EXISTING UTILITIES BEFORE COMMENCING WORK. ANY DAMAGE DUE TO FAILURE OF THE CONTRACTOR TO CONTACT THE PROPER AUTHORITIES SHALL BE BORNE BY THE CONTRACTOR.
9. SCREENED IMAGES SHOW EXISTING CONDITIONS. WHERE EXISTING CONDITIONS LIE UNDER OR ARE IMPINGED UPON BY PROPOSED SITE ELEMENTS, THE EXISTING CONDITION SHALL BE REMOVED, ABANDONED AND/OR CAPPED OR DEMOLISHED AS REQUIRED.
10. THE CONTRACTOR SHALL BE RESPONSIBLE FOR COORDINATING HIS EFFORTS OF THE DEMOLITION WITH ALL TRADES.
11. ALL EXISTING FEATURES AND VEGETATION TO REMAIN SHALL BE PRESERVED UNLESS OTHERWISE NOTED. CONTRACTOR SHALL PROVIDE INDIVIDUAL TREE PROTECTION FOR ALL TREES GREATER THAN 12" IN DIA LOCATED WITHIN 10' OF EARTHWORK OPERATIONS.
12. ANY DISCREPANCIES OR CONFLICTS ARISING BETWEEN EXISTING CONDITIONS AND THE CONSTRUCTION DOCUMENTS SHALL BE BROUGHT TO THE ATTENTION OF THE OWNER'S REPRESENTATIVE IN WRITING BEFORE PROCEEDING.
13. LOCATION OF PROPOSED SITE IMPROVEMENTS SHALL BE STAKED BY THE CONTRACTOR AND APPROVED BY THE LANDSCAPE ARCHITECT PRIOR TO CONSTRUCTION.
14. THE CONTRACTOR SHALL BE RESPONSIBLE FOR MAINTAINING ALL SURVEY CONTROL POINTS THROUGHOUT CONSTRUCTION.

LAYOUT AND MATERIALS LEGEND

- PROPERTY LINE
- TIMBER CURB
- TIMBER CURB W/ WHEELSTOPS
- CEMENT CONCRETE PAVEMENT
- PERMEABLE REINFORCED PAVEMENT
- LAWN
- PRECAST CONCRETE UNIT PAVERS
- POST & RAIL FENCE
- FLUSH CURB
- DETECTABLE WARNING
- POLE W/ DOUBLE FLOOD LIGHT
- WALL MOUNTED LIGHT
- ALIGN ELEMENTS

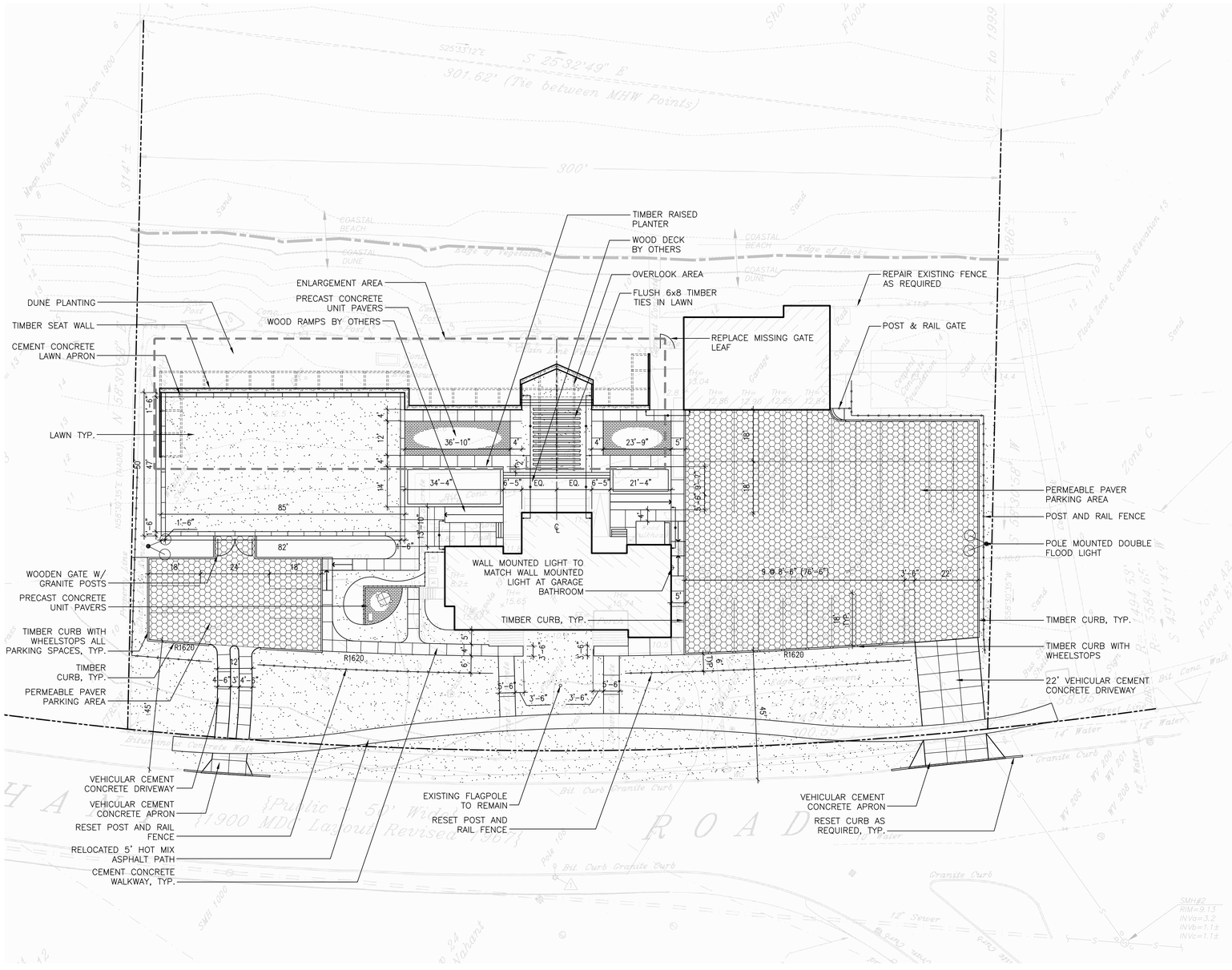

Stantec

Stantec Planning and Landscape Architecture P.C.
141 Portland St.
Boston MA U.S.A.
02114
Tel. 617.523.8103
Fax. 617.523.4333
www.stantec.com

Copyright Reserved

The Contractor shall verify and be responsible for all dimensions. DO NOT scale the drawing — any errors or omissions shall be reported to Stantec without delay.
The Copyrights to all designs and drawings are the property of Stantec. Reproduction or use for any purpose other than that authorized by Stantec is forbidden.

Revision	By	Appd.	YY.MM.DD
CONTRACTOR PRICING SET	CF	RH	11.10.07

Issued	By	Appd.	YY.MM.DD
File Name: 007891-102.dwg	CF/JF	RH	RH	11.10.07
	Dwn.	Chkd.	Dsgn.	YY.MM.DD

Permit-Seal

Client/Project

TOWN OF NAHANT, MA

Site Design for Nahant Life Saving Station

Nahant, Massachusetts

Title

LAYOUT AND MATERIALS PLAN

Project No. 210800789

Scale 1"=20'-0"

Drawing No. L102

GRADING AND DRAINAGE NOTES

1. THE TOPOGRAPHY, PROPERTY LINES, SITE DETAIL & SURFACE IMPROVEMENTS DEPICTED HEREON WERE OBTAINED FROM A PLAN ENTITLED "EXISTING CONDITIONS FORMER U.S. GOV. LIFE SAVING STATION" 96 NAHANT ROAD, PREPARED FOR THE TOWN OF NAHANT BY RYAN ENGINEERING CORP. DATED JULY 9, 1999. MERIDIAN ASSOCIATES, INC. (MAI) PERFORMED A LIMITED INSTRUMENT SURVEY ON THE GROUND ON MARCH 13, 2007 TO OBTAIN BUILDING ELEVATIONS, NEW UTILITIES AND SET TEMPORARY BENCHMARKS.
2. THE ELEVATIONS DEPICTED HEREON WERE BASED ON THE NATIONAL GEODETIC VERTICAL DATUM OF 1929 (NGVD) AS ESTABLISHED BY THE PLAN REFERENCED IN NOTE 1. STARTING BENCHMARK DISK RM1 DEPICTED HEREON. (DISK WAS DESTROYED SINCE REFERENCED PLAN WAS PREPARED.)
3. ANY DISCREPANCIES OR CONFLICTS ARISING BETWEEN EXISTING CONDITIONS AND THE GRADING PLAN SHALL BE BROUGHT TO THE ATTENTION OF THE LANDSCAPE ARCHITECT BEFORE PROCEEDING.
4. GRADE STAKES SHOWING FINISH GRADES SHALL BE REVIEWED BY THE LANDSCAPE ARCHITECT IN THE FIELD BEFORE FINAL GRADING CAN COMMENCE.
5. LOAM AND TOPSOIL SHALL BE REQUIRED TO BE TESTED FOR COMFORMANCE WITH SPECIFICATIONS BEFORE FINISH GRADING CAN BEGIN. CARE SHALL BE TAKEN NOT TO COMPACT TOPSOIL AREAS BEYOND SPECIFIED RATES OR WORK SOIL IN A WET OR FROZEN STATE.
6. THE CONTRACTORS WORK SHALL BE SCHEDULED TO ALLOW THE FINISHED SUBGRADE ELEVATIONS TO DRAIN PROPERLY WITHOUT PUDDLING. PROVIDE TEMPORARY POSITIVE DRAINAGE AS REQUIRED.
7. THE PROPOSED PAVEMENT AND PLANTING AREAS SHALL BE PITCHED IN THE DIRECTION SHOWN ON THE DRAWINGS. IF NOT OTHERWISE SHOWN ON THE PLANS, PROPOSED PAVEMENT AREAS SHALL BE PITCHED A MINIMUM OF ONE PERCENT. BLEND GRADES OF NEW PAVEMENTS, PLANTING AND SEEDED LAWN AREAS SMOOTHLY INTO EACH OTHER AND EXISTING GRADES TO REMAIN.
8. CONTRACTOR SHALL TAPER LOAM BORROW AS REQUIRED TO MEET THE BASES OF EXISTING TREES. NO FILL MATERIAL MAY BE PLACED AGAINST THE BASE OF AN EXISTING TREE.
9. MEET EXISTING GRADES AT BASE OF WEATHER STATION

TEMPORARY BENCHMARK CHART

T.B.M.#	DESCRIPTION	ELEVATION
1	SQUARE-CUT SET IN LIGHT POLE BASE	9.51
2	SQUARE-CUT SET IN WEATHER STATION BASE	13.84

GRADING AND DRAINAGE LEGEND

	PROPERTY LINE
	LIMITS OF GRADING
10	PROPOSED CONTOUR MAJOR
11	PROPOSED CONTOUR MINOR
+14.25	SPOTGRADE
←	DIRECTION OF DRAINAGE
PA	PLANTED AREA

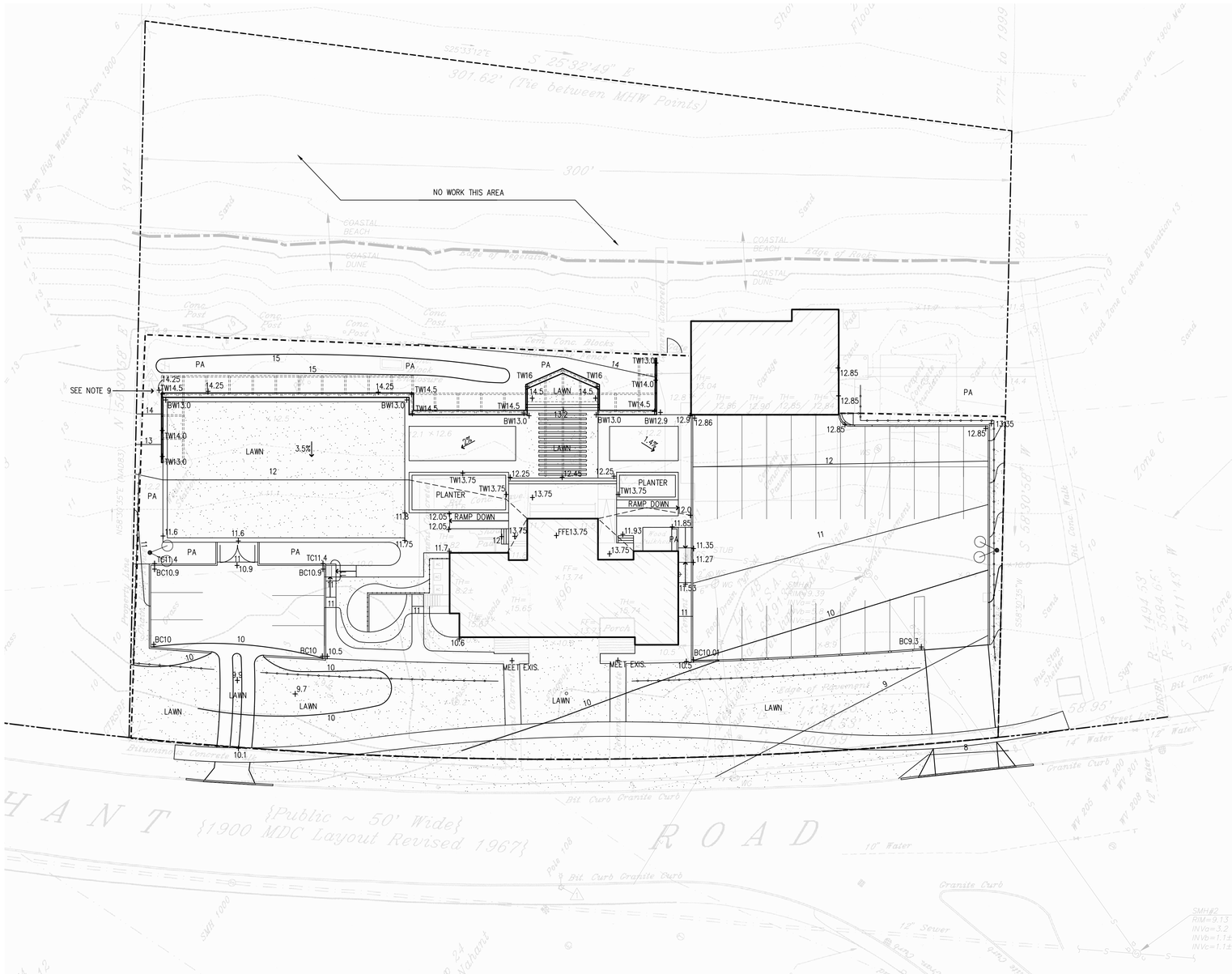

Stantec

Stantec Planning and Landscape Architecture P.C.
141 Portland St.
Boston MA U.S.A.
02114
Tel. 617.523.8103
Fax. 617.523.4333
www.stantec.com

Copyright Reserved

The Contractor shall verify and be responsible for all dimensions. DO NOT scale the drawing — any errors or omissions shall be reported to Stantec without delay.
The Copyrights to all designs and drawings are the property of Stantec. Reproduction or use for any purpose other than that authorized by Stantec is forbidden.

Revision	By	Appd.	YY.MM.DD
CONTRACTOR PRICING SET	CF	RH	11.10.07

Issued	By	Appd.	YY.MM.DD
File Name: 007891-103.dwg	CF/JF	RH	RH	11.10.07
	Dwn.	Chkd.	Dsgn.	YY.MM.DD

Permit-Seal

Client/Project

TOWN OF NAHANT, MA

Site Design for Nahant Life Saving Station

Nahant, Massachusetts

Title

GRADING AND DRAINAGE PLAN

Project No. 210800789

Scale 1"=20'-0"

Drawing No.

L103

PLANT SCHEDULE

TREES

SYM	BOTANICAL NAME	COMMON NAME	QTY	SIZE	COMMENT
PR	Pinus rigida	PITCH PINE	2	4-5'	
PT	Pinus thunbergii	JAPANESE BLACK PINE	6	4-5'	
PT	Pinus thunbergii	JAPANESE BLACK PINE	4	6-7'	

SHRUBS

SYM	BOTANICAL NAME	COMMON NAME	QTY	SIZE	COMMENT
JC	Juniperus conferta	SHORE JUNIPER	24	#2 POT	
MP	Myrica pensylvanica	BAYBERRY	45	2.5-3' (#3 POT)	
MP	Myrica pensylvanica	BAYBERRY	24	3-4' B&B	
PM	Prunus maritima	BEACH PLUM	25	2-3' (#3 POT)	
PM	Prunus maritima	BEACH PLUM	15	3-4' (#7 POT)	

PERENNIALS

SYM	BOTANICAL NAME	COMMON NAME	QTY	SIZE	COMMENT
AU	Arctostaphylos uva-ursi 'Massachusetts'	BEARBERRY	48	#1 POT	
AS	Artemesia stelleriana 'Silver Brocade'	BEACH SAGE	48	#1 POT	
EG	Elymus arenarius 'Glauca'	BLUE LYME GRASS	36	#1 POT	
ES	Eryngium amethystinum 'Sapphire Blue'	AMETHYST SEA HOLLY	18	#1 POT	
GG	Gaillardia x grandiflora 'Burgundy'	BLANKET FLOWER	27	#1 POT	
NN	Nipponanthemum nipponicum	MONTAUK DAISY	102	#1 POT	
PA	Panicum amarum 'Dewey Blue'	BITTER SWITCHGRASS	30	#1 POT	
PV	Panicum Virgatum 'Northwind'	NORTHWIND SWITCHGRASS	18	#1 POT	

DUNE PLUGS

SYM	BOTANICAL NAME	COMMON NAME	QTY	SIZE	COMMENT
AB	Ammophila breviglulata 'Cape'	CAPE AMERICAN BEACH GRASS	2440	PLUG	
DUNE PLUGS	Chamaecrista fasciculate	PARTRIDGE PEA	48	PLUG	
	Elymus virginicus	DUNE WILDRYE	48	PLUG	
	Lathyrus japonicus	BEACH PEA	48	PLUG	
	Onethera humifusa	EVENING PRIMROSE	48	PLUG	
	Panicum amarum	BITTER PANICGRASS	48	PLUG	
	Panicum amarum var. amarulum	COASTAL PANICGRASS	48	PLUG	
	Schizachyrum scoparium var. littoralis	COASTAL LITTLE BLUESTEM	48	PLUG	
	Solidago sempervirrons	SEASIDE GOLDENROD	48	PLUG	
	Strophostyles helvola	TRAILING WILD BEAN	48	PLUG	

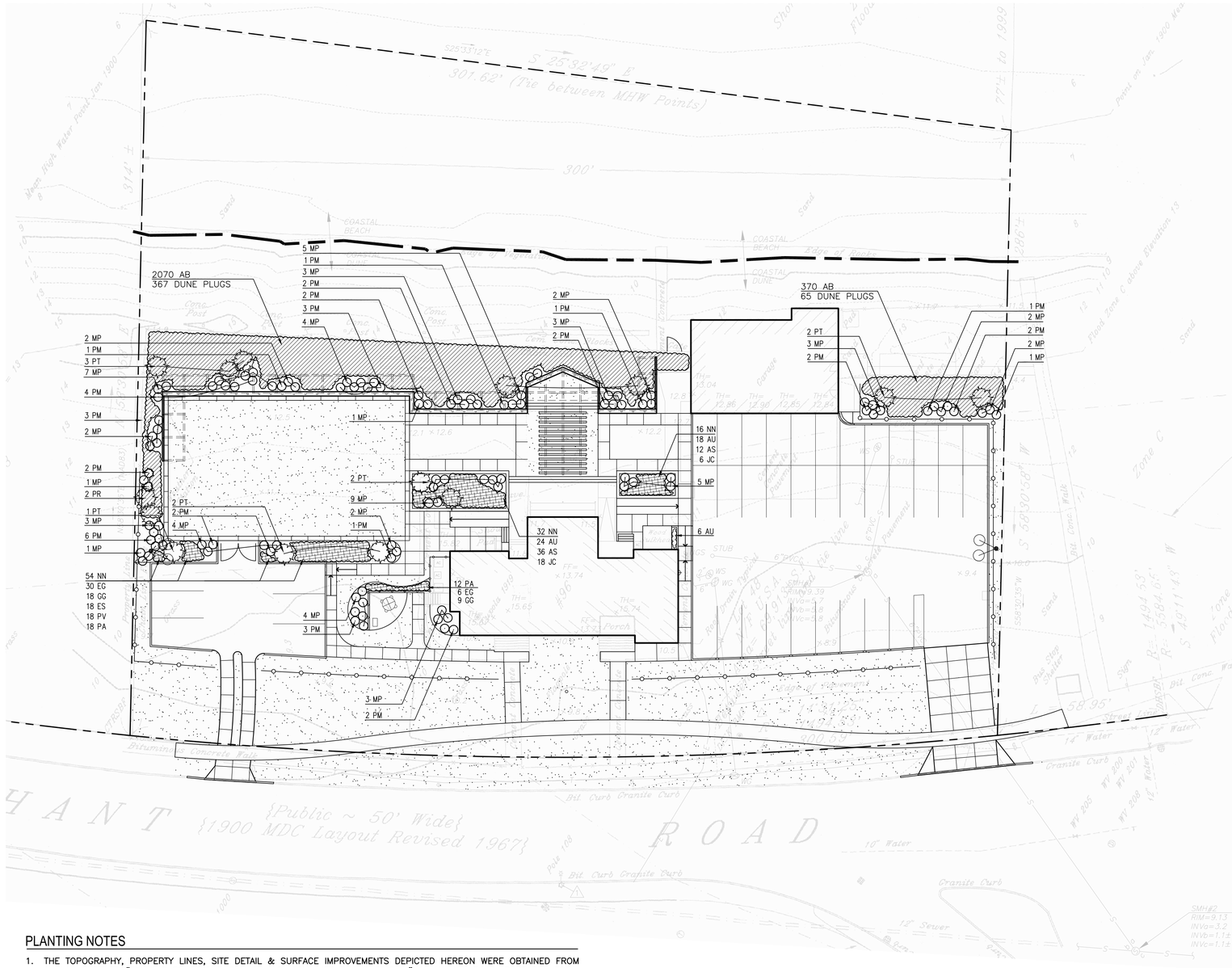

PLANTING LEGEND

- GROUNDCOVER / PERENNIAL PLANTING
- DUNE PLUG PLANTING
- SHRUB PLANTING
- EVERGREEN TREE

PLANTING NOTES

1. THE TOPOGRAPHY, PROPERTY LINES, SITE DETAIL & SURFACE IMPROVEMENTS DEPICTED HEREON WERE OBTAINED FROM A PLAN ENTITLED "EXISTING CONDITIONS FORMER U.S. GOV. LIFE SAVING STATION" 96 NAHANT ROAD, PREPARED FOR THE TOWN OF NAHANT BY RYAN ENGINEERING CORP. DATED JULY 9, 1999. MERIDIAN ASSOCIATES, INC. (MAI) PERFORMED A LIMITED INSTRUMENT SURVEY ON THE GROUND ON MARCH 13, 2007 TO OBTAIN BUILDING ELEVATIONS, NEW UTILITIES AND SET TEMPORARY BENCHMARKS.
2. THE CONTRACTOR SHALL SUPPLY ALL PLANT MATERIALS IN QUANTITIES SUFFICIENT TO COMPLETE THE PLANTINGS SHOWN ON THE DRAWINGS.
3. DUNE SAND AND SEED AREAS SHALL BE FILLED WITH 12" MIN. DUNE SAND MATCHING ADJACENT EXISTING DUNE ELEVATIONS AND SEEDED WITH DUNE SEED MIX – REFER TO PLANTING SCHEDULE.
4. THE DIVERSE DUNE RESTORATION SHALL INCLUDE SEEDING AND PLANTING OF A VARIETY OF SPECIES. REFER TO PLANT SCHEDULE.
5. THE DAY PRIOR TO PLANTING, THE LOCATION OF ALL SHRUBS SHALL BE STAKED IN THE FIELD ACCORDING TO PLANS FOR APPROVAL BY THE OWNERS REPRESENTATIVE. THE CONTRACTOR SHALL INFORM THE OWNERS REPRESENTATIVE IMMEDIATELY IN WRITING OF ANY CONFLICTS BETWEEN PROPOSED PLANT LOCATIONS AND BELOW GRADE UTILITIES, STRUCTURE OR LEDGE.
6. ALL PLANTS THAT ARE DELIVERED TO THE SITE AND NOT PLANTED IMMEDIATELY SHALL BE STORED PROPERLY, ACCORDING TO THE SPECIFICATIONS, IN SECURE LOCATIONS APPROVED BY THE OWNERS REPRESENTATIVE.
7. ALL PLANTS SHALL BEAR THE SAME RELATION TO FINISH GRADE AS TO ORIGINAL GRADE BEFORE DIGGING, UNLESS OTHERWISE DETAILED.
8. ALL PLANTS SHALL BE SET PLUMB UNLESS OTHERWISE SPECIFIED.
9. THE LANDSCAPE CONTRACTOR SHALL REFER TO THE SPECIFICATIONS FOR SEASONAL REQUIREMENTS AND OTHER RESTRICTIONS RELATED TO THE TIME OF PLANTING.
10. THE OWNERS REPRESENTATIVE SHALL APPROVE ALL PLANT MATERIAL BEFORE INSTALLATION.

NORTH

0 20' 40'

Stantec

Stantec Planning and
Landscape Architecture P.C.
141 Portland St.
Boston MA U.S.A.
02114
Tel. 617.523.8103
Fax. 617.523.4333
www.stantec.com

Copyright Reserved

The Contractor shall verify and be responsible for all dimensions. DO NOT scale the drawing – any errors or omissions shall be reported to Stantec without delay.
The Copyrights to all designs and drawings are the property of Stantec. Reproduction or use for any purpose other than that authorized by Stantec is forbidden.

Revision	By	Appd.	YY.MM.DD
CONTRACTOR PRICING SET	CF	RH	11.10.07

Issued	By	Appd.	YY.MM.DD
File Name: 007891-104.dwg	CF/JF	RH	RH	11.10.07
	Dwn.	Chkd.	Dsgn.	YY.MM.DD

Permit-Seal

Client/Project

TOWN OF NAHANT, MA

Site Design for Nahant Life Saving Station

Nahant, Massachusetts

Title

PLANTING PLAN

Project No. 210800789

Scale 1"=20'-0"

Drawing No.

L104

	A	B
CONCRETE WALK	1 1/2"	4"
CONCRETE DRIVE	1 1/2"	7"

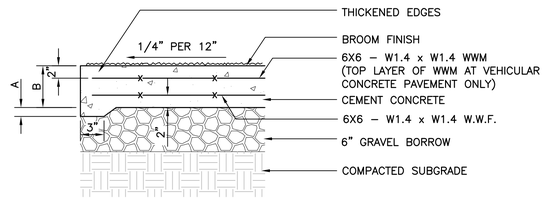

1 CEMENT CONCRETE PAVEMENT

SCALE: 1"=1'–0"

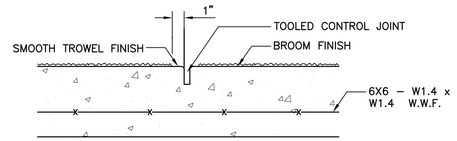

CONTRACTION JOINT

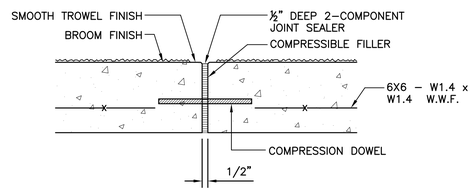

EXPANSION JOINT

3 CONCRETE JOINT DETAILS

NOT TO SCALE

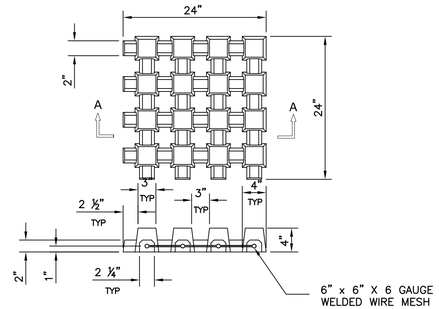

SECTION A-A

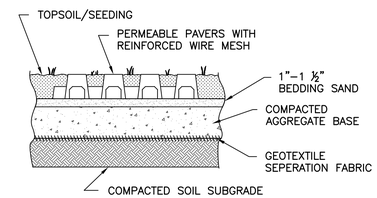

4 PERMEABLE REINFORCED PAVER

SCALE: 1"=1'–0"

	A	B	C
BIT. CONCRETE WALK	8"	2"	1"

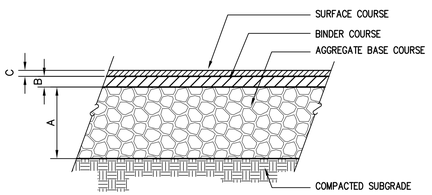

2 BITUMINOUS CONCRETE PATH

SCALE: 1"=1'–0"

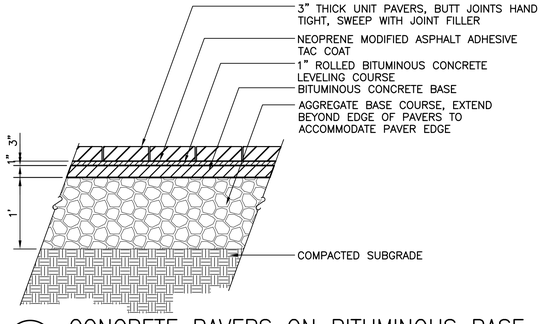

5 CONCRETE PAVERS ON BITUMINOUS BASE

SCALE: 1"=1'–0"

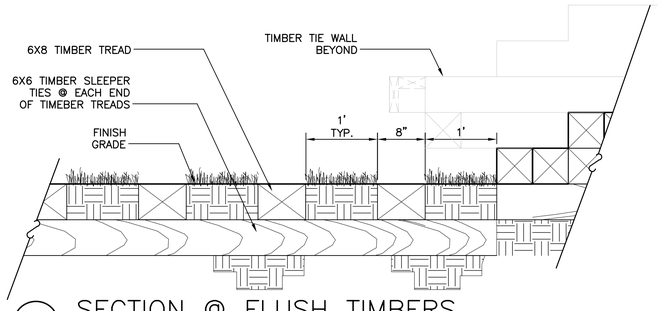

6 SECTION @ FLUSH TIMBERS

SCALE: 2"=1'–0"

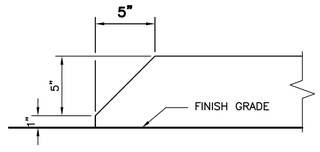

7 EXPOSED TIMBER TIE

SCALE: 1/2"=1'–0"

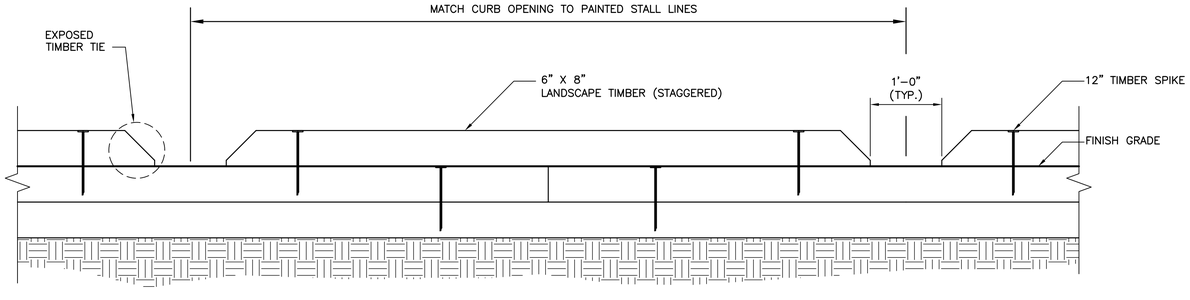

8 TIMBER CURB @ WHEELSTOP– ELEVATION

SCALE: 1"=1'–0"

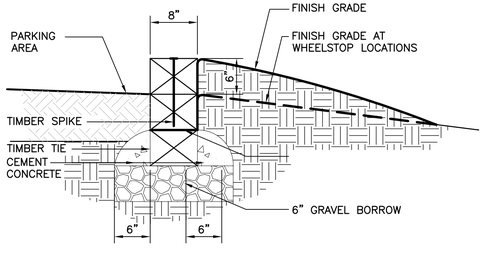

9 TIMBER CURB – SECTION

SCALE: 1"=1'–0"

Stantec Planning and
Landscape Architecture P.C.
141 Portland St.
Boston MA U.S.A.
02114
Tel. 617.523.8103
Fax. 617.523.4333
www.stantec.com

Copyright Reserved

The Contractor shall verify and be responsible for all dimensions. DO NOT scale the drawing – any errors or omissions shall be reported to Stantec without delay.
The Copyrights to all designs and drawings are the property of Stantec. Reproduction or use for any purpose other than that authorized by Stantec is forbidden.

Revision	By	Appd.	YY.MM.DD

CONTRACTOR PRICING SET	CF	RH	11.10.07
Issued	By	Appd.	YY.MM.DD

File Name: 007891–501.dwg	CF/JF	RH	RH	11.10.07
	Dwn.	Chkd.	Dsgn.	YY.MM.DD

Permit-Seal

Client/Project

TOWN OF NAHANT, MA

Site Design for Nahant Life Saving Station

Nahant, Massachusetts

Title

SITE DETAILS

Project No. 210800789

Scale AS NOTED

Drawing No.

L501

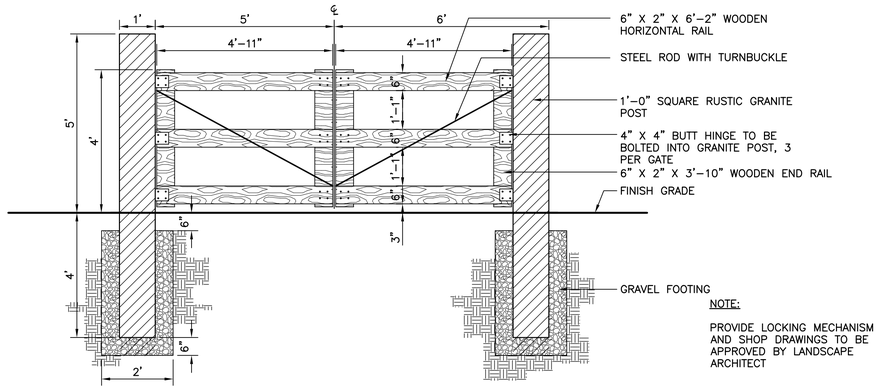

NOTE:

PROVIDE LOCKING MECHANISM AND SHOP DRAWINGS TO BE APPROVED BY LANDSCAPE ARCHITECT

1 WOODEN GATE W/GRANITE POSTS

SCALE: 1/2"=1'-0"

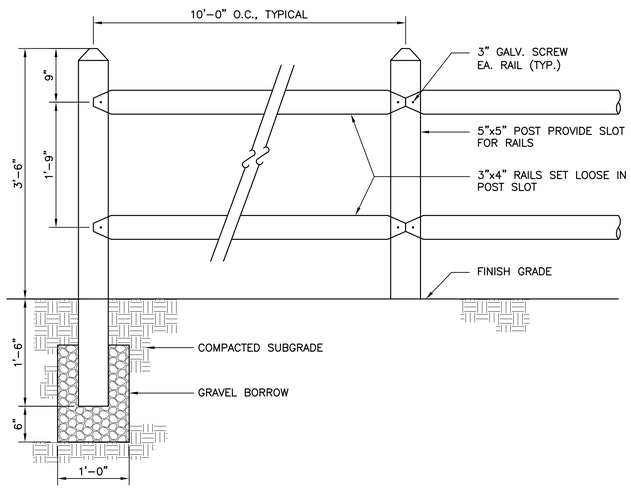

2 POST AND RAIL FENCE

SCALE: 1"=1'-0"

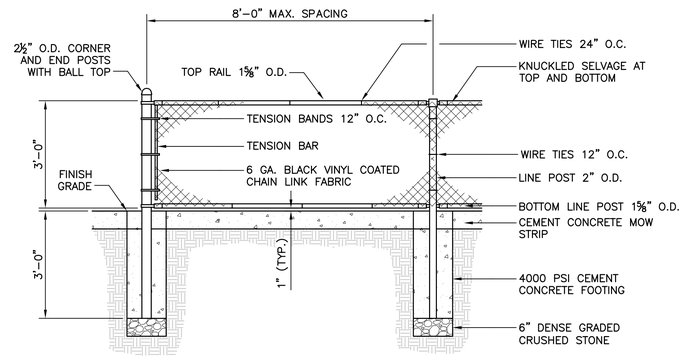

3 3' HT. CHAIN LINK FENCE

SCALE: 1/2"=1'-0"

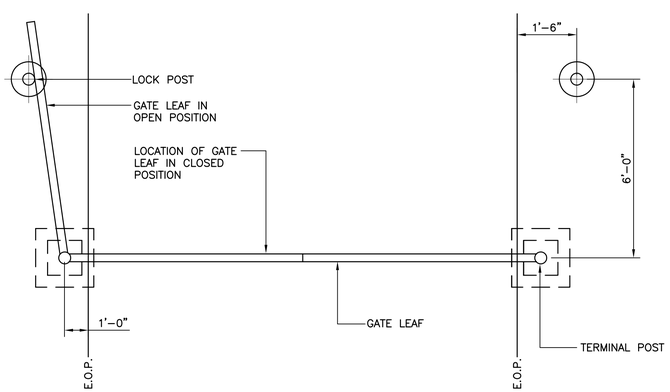

4 VEHICULAR CONTROL GATE – PLAN

SCALE: 1"=1'-0"

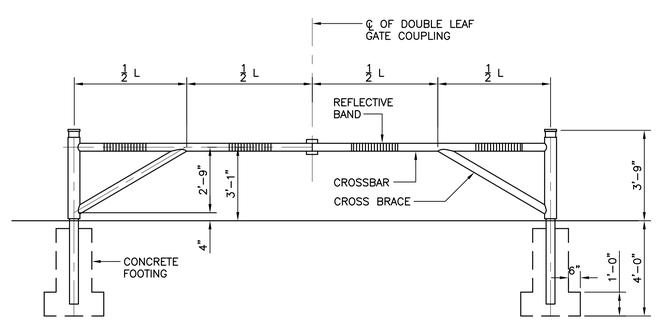

5 DOUBLE LEAF VEHICULAR GATE – ELEVATION

SCALE: 1"=1'-0"

Stantec Planning and Landscape Architecture P.C.
141 Portland St.
Boston MA U.S.A.
02114
Tel. 617.523.8103
Fax. 617.523.4333
www.stantec.com

Copyright Reserved

The Contractor shall verify and be responsible for all dimensions. DO NOT scale the drawing – any errors or omissions shall be reported to Stantec without delay.
The Copyrights to all designs and drawings are the property of Stantec. Reproduction or use for any purpose other than that authorized by Stantec is forbidden.

Revision	By	Appd.	YY.MM.DD
CONTRACTOR PRICING SET	CF	RH	11.10.07

Issued	By	Appd.	YY.MM.DD
File Name: 00789I-501.dwg	CF/JF	RH	RH	11.10.07
	Dwn.	Chkd.	Dsgn.	YY.MM.DD

Permit-Seal

Client/Project

TOWN OF NAHANT, MA

Site Design for Nahant Life Saving Station

Nahant, Massachusetts

Title

SITE DETAILS

Project No. 210800789

Scale AS NOTED

Drawing No.

L502

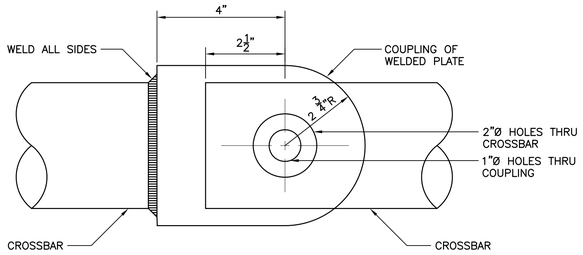

PLAN

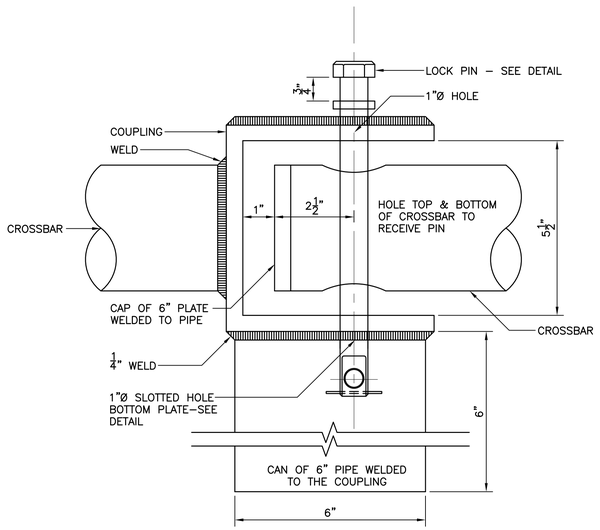

1 COUPLING AND LOCK DETAIL

NOT TO SCALE

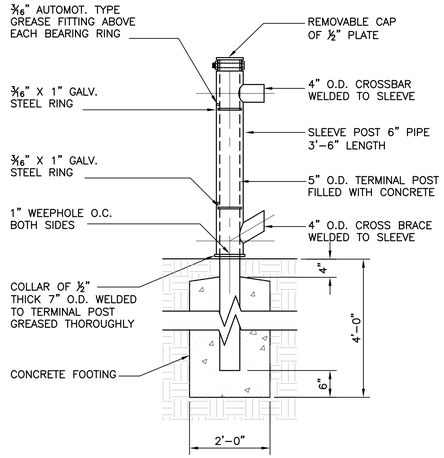

2 TERMINAL POST

SCALE: 3/4"=1'–0"

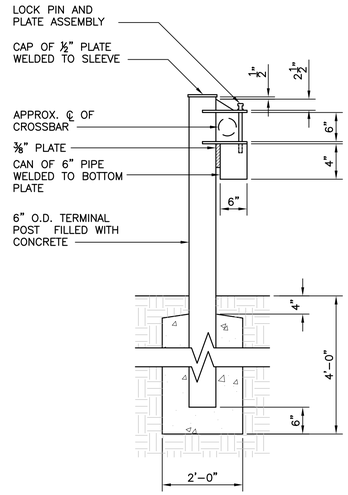

3 LOCK POST

SCALE: 3/4"=1'–0"

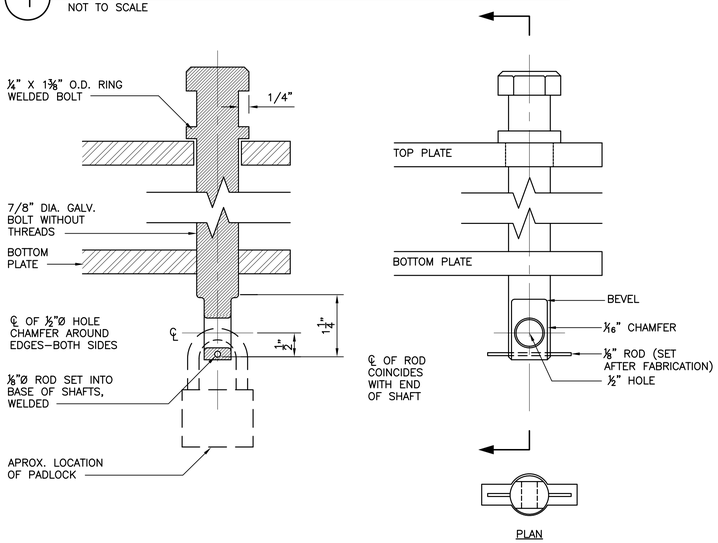

6 LOCK PIN AND PLATE DETAIL

NOT TO SCALE

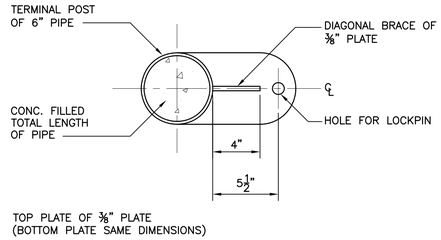

4 TOP PLATE – SECTION

SCALE: 2"=1'–0"

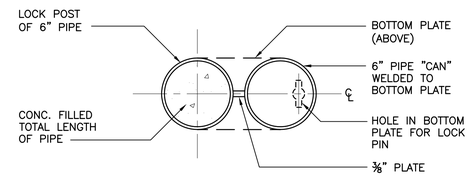

5 CAN AT LOCK POST – SECTION

SCALE: 2"=1'–0"

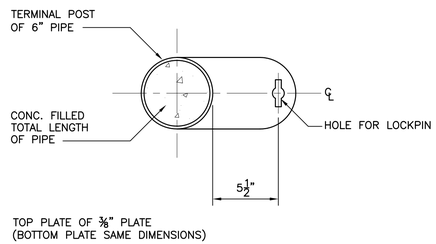

7 BOTTOM PLATE – SECTION

SCALE: 2"=1'–0"

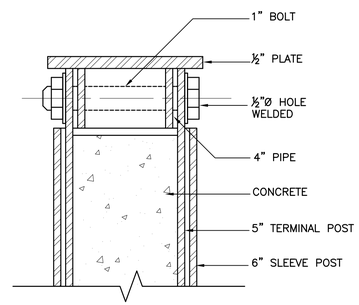

8 REMOVABLE CAP DETAIL

SCALE: 4"=1'–0"

Stantec

Stantec Planning and Landscape Architecture P.C.
141 Portland St.
Boston MA U.S.A.
02114
Tel. 617.523.8103
Fax. 617.523.4333
www.stantec.com

Copyright Reserved

The Contractor shall verify and be responsible for all dimensions. DO NOT scale the drawing – any errors or omissions shall be reported to Stantec without delay.
The Copyrights to all designs and drawings are the property of Stantec. Reproduction or use for any purpose other than that authorized by Stantec is forbidden.

Revision	By	Appd.	YY.MM.DD
CONTRACTOR PRICING SET	CF	RH	11.10.07
Issued	By	Appd.	YY.MM.DD
File Name: 00789I–501.dwg	CF/JF	RH	RH	11.10.07
	Dwn.	Chkd.	Dsgn.	YY.MM.DD

Permit-Seal

Client/Project

TOWN OF NAHANT, MA

Site Design for Nahant Life Saving Station

Nahant, Massachusetts

Title

SITE DETAILS

Project No. 210800789

Scale AS NOTED

Drawing No.

L503

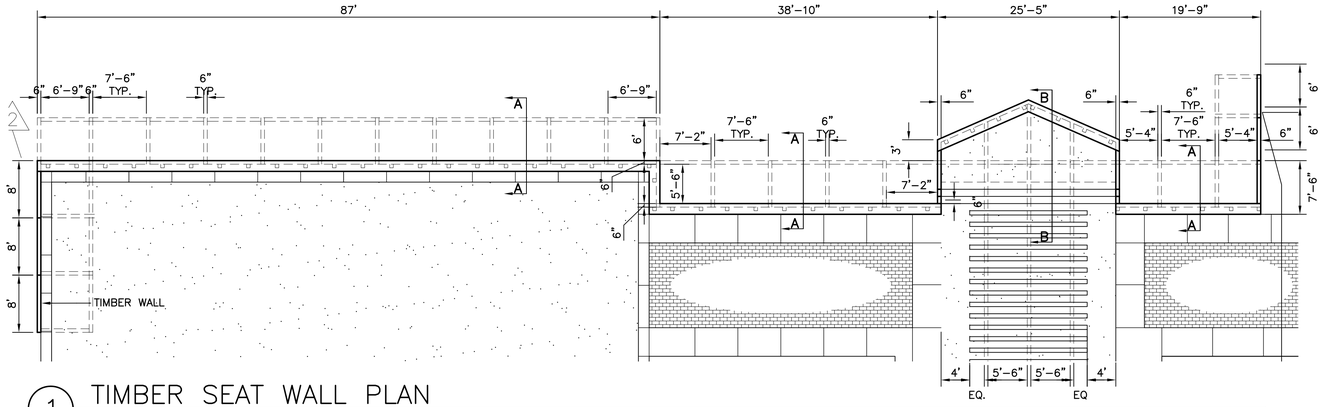

1 TIMBER SEAT WALL PLAN

SCALE: 1"=1'-0"

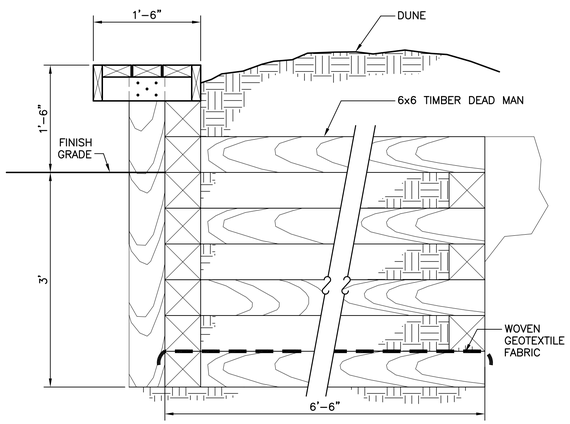

NOTE: SPIKES NOT SHOWN; SPIKE TIMBERS TOGETHER AT CORNERS AND EVERY 3', TYP.

2 TYPICAL SECTION AA

SCALE: 1"=1'-0"

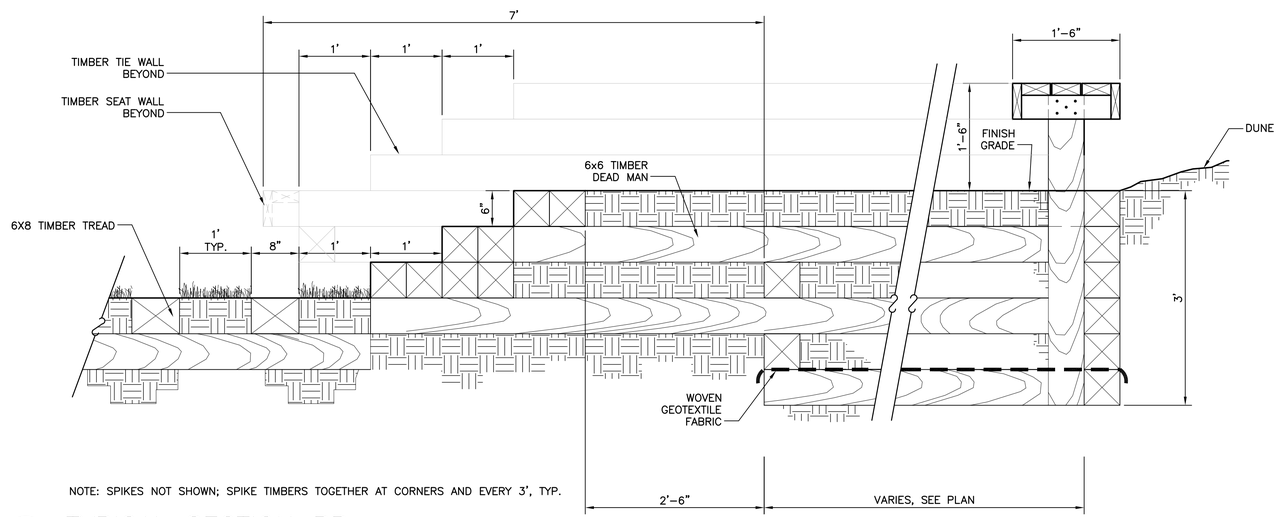

NOTE: SPIKES NOT SHOWN; SPIKE TIMBERS TOGETHER AT CORNERS AND EVERY 3', TYP.

3 TYPICAL SECTION BB

SCALE: 1"=1'-0"

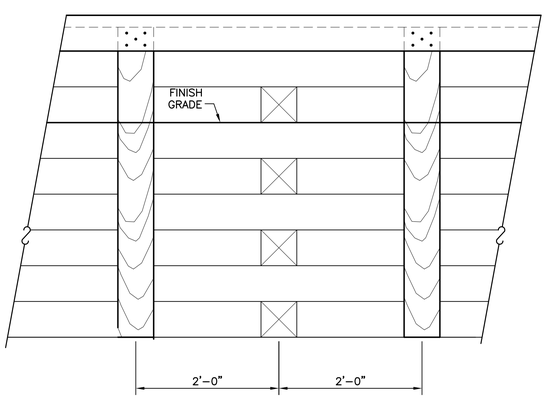

NOTE: SPIKES NOT SHOWN; SPIKE TIMBERS TOGETHER AT CORNERS AND EVERY 3', TYP.

4 TYPICAL TIMBER SEATWALL ELEVATION

SCALE: 1"=1'-0"

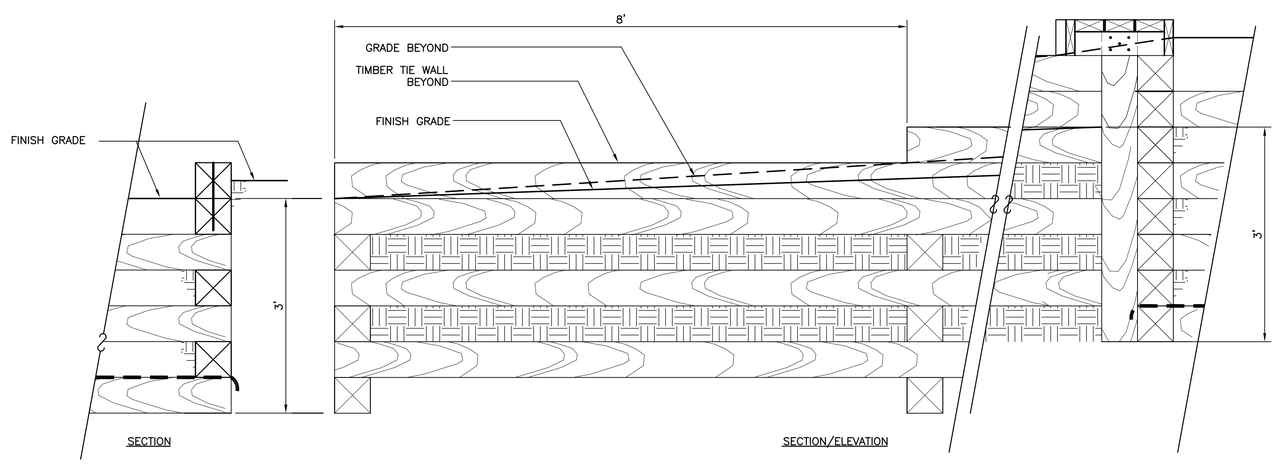

NOTE: SPIKES NOT SHOWN; SPIKE TIMBERS TOGETHER AT CORNERS AND EVERY 3', TYP.

5 STEPPED TIMBER WALL

SCALE: 1"=1'-0"

Stantec

Stantec Planning and Landscape Architecture P.C.
141 Portland St.
Boston MA U.S.A.
02114
Tel. 617.523.8103
Fax. 617.523.4333
www.stantec.com

Copyright Reserved

The Contractor shall verify and be responsible for all dimensions. DO NOT scale the drawing — any errors or omissions shall be reported to Stantec without delay.
The Copyrights to all designs and drawings are the property of Stantec. Reproduction or use for any purpose other than that authorized by Stantec is forbidden.

Revision	By	Appd.	YY.MM.DD
CONTRACTOR PRICING SET	CF	RH	11.10.07

Issued	By	Appd.	YY.MM.DD
File Name: 00789I-501.dwg	CF/JF	RH	RH	11.10.07
Permit-Seal	Dwn.	Chkd.	Dsgn.	YY.MM.DD

Client/Project

TOWN OF NAHANT, MA

Site Design for Nahant Life Saving Station

Nahant, Massachusetts

Title

SITE DETAILS

Project No. 210800789

Scale AS NOTED

Drawing No.

L504

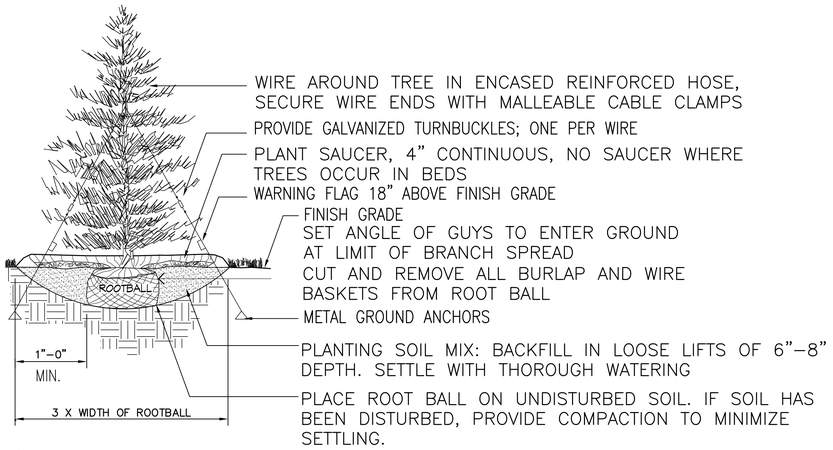

NOTE:
1. TREE SHALL BEAR SAME RELATIONSHIP TO FINISHED GRADE AS IT BORE TO NURSERY OR FIELD GRADE
2. INSTALL THREE GUYS PER TREE; EQUALLY SPACED AROUND BALL. ATTACH GUYS AT 2/3 HEIGHT OF TREE; USE DOUBLE STRAND GALVANIZED STEEL WIRE

1 EVERGREEN TREE PLANTING
NOT TO SCALE

NOTES

1. RAISE AND REPLANT ANY SHRUBS WHICH SETTLE MORE THAN 2" AFTER PLANTING & WATERING IN
2. SHRUBS SHALL BE SET PLUMB
3. WATER BY FLOODING TWICE IN FIRST TWO HOURS AFTER PLANTING. WATER & MAINTAIN AS PER STANDARD SPECIFICATIONS
4. LOOSE OR CRACKED ROOTBALLS WILL NOT BE ACCEPTED FOR PLANTING

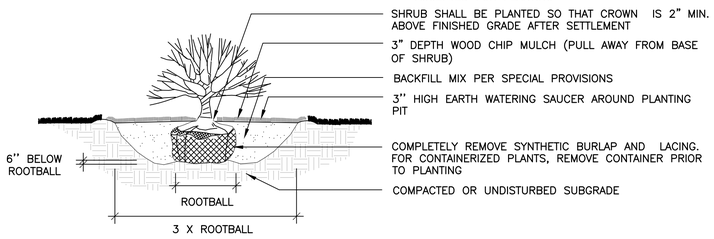

2 SHRUB PLANTING
NOT TO SCALE

NOTES

1. RAISE AND REPLANT ANY SHRUBS WHICH SETTLE MORE THAN 2" AFTER PLANTING & WATERING IN
2. SHRUBS SHALL BE SET PLUMB
3. WATER BY FLOODING TWICE IN FIRST TWO HOURS AFTER PLANTING. WATER & MAINTAIN AS PER STANDARD SPECIFICATIONS

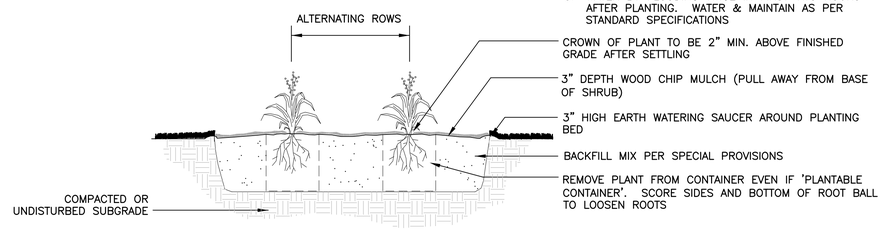

3 PERENNIAL PLANTING
NOT TO SCALE

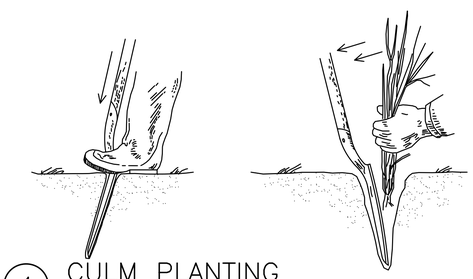

NOTES

1. CULMS SHALL BE PLANTED WITH EITHER A "POGO" STYLE PLANTER OR A STRAIGHT BLADE SHOVEL.
2. HOLES SHALL BE 8"–10" DEEP TO ALLOW THE LIVING NODE TO REACH DEEPLY INTO THE SAND.
3. TWO CULMS SHALL BE PLACED IN EACH HOLE.
4. SLIDE THE PLANT DOWN THE BLADE WITH THE BLADE IN THE GROUND. PUSH THE RHIZOMES DOWN INTO THE HOLE AS THE SHOVEL IS LIFTED.
5. HEEL–IN EACH BUNDLE USING THE FOOT OR PALM OF THE HAND. CHECH FOR FIRMNESS. PLANTS SHOULD WITHSTAND A GENTLE TUG.
6. APPLY FERTILIZER AS PER SPECIFICATION.

4 CULM PLANTING
NOT TO SCALE

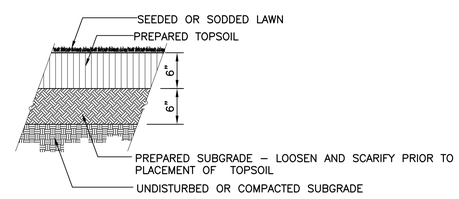

5 LOAM AND SEED
NOT TO SCALE

Stantec Planning and Landscape Architecture P.C.
141 Portland St.
Boston MA U.S.A.
02114
Tel. 617.523.8103
Fax. 617.523.4333
www.stantec.com

Copyright Reserved
The Contractor shall verify and be responsible for all dimensions. DO NOT scale the drawing – any errors or omissions shall be reported to Stantec without delay.
The Copyrights to all designs and drawings are the property of Stantec. Reproduction or use for any purpose other than that authorized by Stantec is forbidden.

Revision	By	Appd.	YY.MM.DD
CONTRACTOR PRICING SET	CF	RH	11.10.07

Issued	By	Appd.	YY.MM.DD
File Name: 00789I–501.dwg	CF/JF	RH	RH	11.10.07
	Dwn.	Chkd.	Dsgn.	YY.MM.DD

Permit-Seal

Client/Project
TOWN OF NAHANT, MA
Site Design for Nahant Life Saving Station
Nahant, Massachusetts

Title
SITE DETAILS

Project No. 210800789
Scale AS NOTED

Drawing No.
L505