2020 WATER MAIN IMPROVEMENTS

TOWN OF NAHANT, MASSACHUSETTS

APRIL 2020

DEPARTMENT OF PUBLIC WORKS
SUPERINTENDENT: ZACHARY TAYLOR

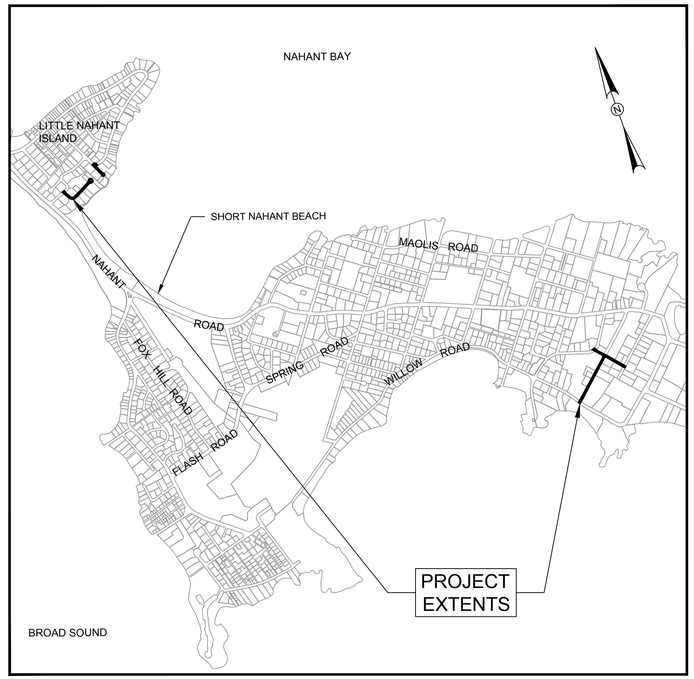

LOCUS PLAN
1" = 1000'

LIST OF DRAWINGS

SHEET	DRAWING TITLE
G-00	TITLE SHEET
G-01	GENERAL NOTES, LEGENDS AND KEY PLAN
C-01	FURBUSH RD (STA. 1000+00 TO STA. 1007+12) AND WALTON RD (STA. 1100+00 TO STA. 1104+58)
C-02	HOWE RD (STA. 2000+00 TO STA. 2005+11) AND MILLS TER (STA. 2100+00 TO STA. 2102+00)
D-01	DETAIL SHEET 1
D-02	DETAIL SHEET 2

COMMONWEALTH OF MASSACHUSETTS
LAURA A. NOLAN
CIVIL
NO. 48701
REGISTERED PROFESSIONAL ENGINEER
4-6-2020

KLEINFELDER
Bright People. Right Solutions.

NAHANT MASS. 1630 INCORPORATED 1853

PLOT DATE=4/6/2020 1:59:51 PM USER=DORIS JENKINS FILENAME=G:_clients\Nahant MA\Water Mains Project 2020\Drawings\General\Nahant_Water Main Improvements_Cover Page.dwg

GENERAL NOTES

1. BASE MAPPING AND EXISTING SITE FEATURES ARE BASED ON INFORMATION FROM THE TOWN OF NAHANT GIS DATABASE. LOCATION OF GAS VALVES AND LINES ARE BASED ON INFORMATION FROM NATIONAL GRID, RECEIVED DECEMBER 10, 2019. THE LOCATION OF SURFACE AND UNDERGROUND UTILITIES AND EXPECTED OVER/UNDER CROSSING INFORMATION SHOULD BE CONSIDERED APPROXIMATE, AND MAY VARY FROM THE LOCATIONS SHOWN HERE. ADDITIONAL UNDERGROUND UTILITIES AND/OR STRUCTURES MAY BE ENCOUNTERED. SIZE, MATERIAL, AND LOCATION OF EXISTING UTILITIES IN PROJECT VICINITY SHALL BE FIELD VERIFIED BY THE CONTRACTOR. THE TOWN AND ITS ENGINEER ASSUME NO RESPONSIBILITY FOR THE ACCURACY OF THE EXISTING UTILITY INFORMATION.
2. CONTRACTOR SHALL VERIFY LOCATION OF INDIVIDUAL BUILDING SERVICES FOR GAS, WATER, ELECTRIC, TELEPHONE, AND SANITARY SEWER WHICH ARE NOT SHOWN ON THE PLAN. ANY DAMAGE TO UTILITIES CAUSED BY THE CONTRACTOR SHALL BE THE CONTRACTOR'S RESPONSIBILITY, AND COSTS FOR THE REPAIR OR REPLACEMENT OF SUCH DAMAGED UTILITIES SHALL BE BORNE BY THE CONTRACTOR.
3. LOCATIONS OF ALL SUBSURFACE STRUCTURES AND UTILITIES SHALL BE VERIFIED IN COORDINATION WITH THE APPROPRIATE AGENCY/UTILITY. THE CONTRACTOR SHALL CALL THE DIGSAFE CENTER AT 1-888-344-7233 TO LOCATE UNDERGROUND UTILITIES IN THE FIELD AND NOTIFY UTILITY COMPANIES OF CONSTRUCTION A MINIMUM OF 72 WEEKDAY HOURS PRIOR TO ANY EXCAVATION.
4. PROPERTY LINES AND RIGHT OF WAY LINES SHOWN WERE TAKEN FROM GIS AND ARE APPROXIMATE.
5. EXISTING UTILITY POLES THAT FALL WITHIN 3 FEET OF THE PROPOSED EDGE OF TRENCH SHALL BE SUPPORTED AS REQUIRED BY THE UTILITY OWNER DURING EXCAVATION OF THE TRENCH. EXISTING GAS MAINS THAT FALL WITHIN PROPOSED WATER MAIN TRENCH LIMITS SHALL BE SUPPORTED AS REQUIRED BY THE UTILITY OWNER DURING EXCAVATION OF THE TRENCH. CONTRACTOR SHALL COORDINATE UTILITY SUPPORT AND BE RESPONSIBLE FOR COSTS AND FEES.
6. CONTRACTOR SHALL BE RESPONSIBLE FOR PERFORMING TEST PITS TO LOCATE AND CONFIRM UTILITY SIZING, MATERIAL AND/OR LOCATION AS DIRECTED BY THE ENGINEER. TEST PITS SHALL BE PERFORMED WELL IN ADVANCE OF CONSTRUCTION OPERATIONS SO THAT ANY CHANGES IN ALIGNMENT AND/OR GRADE OF THE PROPOSED WORK OR UTILITY RELOCATIONS MAY BE DETERMINED. CONTRACTOR SHALL NOTIFY THE RELEVANT UTILITY OWNERS AT LEAST 72 HOURS PRIOR TO EXCAVATION OF THE TEST PITS.
7. WHERE TEMPORARY OR PERMANENT UTILITY RELOCATION IS REQUIRED, THE CONTRACTOR SHALL NOTIFY THE AFFECTED UTILITY COMPANY 14 DAYS IN ADVANCE OF CONSTRUCTION AND SHALL COORDINATE THE NEW WORK WITH THE UTILITY RELOCATION.
8. RECORDS INDICATE THE PRESENCE OF ASBESTOS CEMENT (AC) SEWER AND DRAIN PIPELINES IN THE VICINITY OF FURBUSH ROAD. THE CONTRACTOR SHALL TAKE ALL PRECAUTIONS WHEN SUPPORTING THE EXISTING SEWER AND DRAINPIPE TO AVOID BREAKING OF THE PIPELINES.
9. CONTRACTOR SHALL OBTAIN AND MAINTAIN THROUGHOUT CONSTRUCTION, VALID ROAD OPENING PERMIT(S) AND EXCAVATION PERMIT(S) FROM THE DEPARTMENT OF PUBLIC WORKS PRIOR TO CONSTRUCTION.
10. CONTRACTOR SHALL BE AWARE THAT UNDERGROUND DRAINAGE STRUCTURES EXIST IN AREAS NEAR CATCH BASINS. CONTRACTOR SHALL VERIFY LOCATION OF THESE STRUCTURES PRIOR TO EXCAVATING IN THESE AREAS.
11. ALL DISTURBED AREAS OUTSIDE OF ROADWAY SHALL BE STABILIZED USING PROPER EROSION AND SEDIMENTATION CONTROL MEASURES OR AS DIRECTED BY ENGINEER.
12. CONTRACTOR SHALL PROVIDE SILT SACKS IN ALL CATCH BASINS ALONG THE LINE OF WORK. SEDIMENTATION BARRIERS SHALL REMAIN IN PLACE UNTIL TRENCHES HAVE BEEN PAVED. ADDITIONAL EROSION CONTROL MEASURES MAY BE ADDED AS REQUIRED DURING CONSTRUCTION.
13. EACH LAYER OF MATERIAL USED FOR BACKFILL, EMBANKMENT, ROADBED OR FOUNDATIONS FOR STRUCTURES SHALL BE COMPACTED UNTIL THE DRY DENSITY OF EACH LAYER IS AT LEAST 95 PERCENT OF THE DRY DENSITY ACHIEVED BY THE ASTM D 1557 METHOD C TEST FOR THAT SOIL. ALL MATERIAL THICKNESSES NOTED ON THE DRAWING REFER TO DEPTH AFTER COMPACTION, UNLESS OTHERWISE NOTED.
14. UPON COMPLETION OF THE WORK, ALL DISTURBED AREAS SHALL BE RESTORED TO A CONDITION EQUAL TO OR BETTER THAN THAT WHICH EXISTED PRIOR TO CONSTRUCTION.
15. ALL TRAFFIC MARKINGS SHALL BE RESTORED TO MATCH EXISTING.
16. DURING INCLEMENT WEATHER, ALL EXCAVATED MATERIALS SHALL BE STORED IN A MANNER THAT PREVENTS THEM FROM SPREADING TO AREAS OUTSIDE THE LIMIT OF WORK.

WATER INSTALLATION NOTES

1. UNLESS SPECIFICALLY APPROVED BY THE ENGINEER, ALL WATER LINES INSTALLED UNDER THIS CONTRACT SHALL BE AT A DEPTH OF NOT LESS THAN 5 FEET AS MEASURED FROM THE TOP OF THE PIPE TO FINISHED GRADE. THE WATER MAIN LOCAL HIGH POINT SHALL BE LOCATED AT THE NEAREST HYDRANT.
2. WHENEVER WATER MAINS MUST CROSS SEWERS OR DRAINS, THE WATER MAIN SHALL BE LAID OUT AT SUCH AN ELEVATION THAT THE CROWN OF THE SEWER IS AT LEAST 18-INCHES BELOW OR ABOVE THE INVERT OF THE WATER MAIN. ONE FULL LENGTH OF WATER MAIN SHOULD BE CENTERED OVER THE SEWER SO THAT BOTH JOINTS WILL BE AS FAR FROM THE SEWER AS POSSIBLE. PIPES SHALL BE TESTED TO 150 PSI TO ENSURE WATER TIGHTNESS.
3. WHEN IT IS IMPOSSIBLE TO OBTAIN 18-INCHES VERTICAL SEPARATION OVER A SEWER MAIN AS STIPULATED ABOVE, THE WATER MAIN SHALL BE WRAPPED IN 8 MIL POLY WRAP FOR 10 FEET ON EITHER SIDE OF THE CROSSING.
4. CONTRACTOR TO FURNISH AND INSTALL BENDS AS REQUIRED TO INSTALL PROPOSED WATER MAINS AS SHOWN ON THE PLANS AND IN ACCORDANCE WITH SPECIFICATION SECTION 02615.
5. ALL MECHANICAL JOINT FITTINGS, HYDRANTS AND VALVES SHALL BE RESTRAINED IN ACCORDANCE WITH SPECIFICATION SECTION 02615.
6. WATER GATE VALVE BOXES AND WATER SERVICE BOXES WITHIN THE ROADWAY SHALL BE ADJUSTED TO MATCH THE GRADE OF THE FINISHED ROADWAY DURING THE WORK AT EACH STAGE OR AS DIRECTED BY THE ENGINEER.
7. KNOWN WATER SERVICES ARE SHOWN IN APPROXIMATE LOCATIONS ON THE PLANS FOR THE CONTRACTORS CONVENIENCE ONLY.
8. CONTRACTOR SHALL REPLACE ALL WATER SERVICES TO THE PROPERTY LINE FOR ALL PROPERTIES SERVED BY THE PROPOSED WATER MAIN, INDICATED ON THE DRAWINGS OR DIRECTED BY THE ENGINEER. CONTRACTOR SHALL VERIFY LOCATION OF ALL WATER SERVICES PRIOR TO CONSTRUCTION.
9. SALVAGE FIRE HYDRANTS FOR FUTURE USE BY OWNER. STORE IN VICINITY OF ORIGINAL LOCATION AND PLACE SO AS NOT TO INTERFERE WITH CONSTRUCTION.
10. ALL NEW SERVICES SHALL BE 1" TYPE K COPPER (REF. AWWA C-800; ASTM B-88).
11. ALL MECHANICAL JOINT FITTINGS AND VALVES SHALL BE RESTRAINED USING MEGA-LUG, TYPE GLANDS, OR EQUAL. UNRESTRAINED PIPE ADJACENT TO RESTRAINED FITTINGS SHALL BE RESTRAINED AS SPECIFIED IN SECTION 02615.
12. THERE SHALL BE NO PHYSICAL CONNECTION BETWEEN PUBLIC OR PRIVATE POTABLE WATER SUPPLY SYSTEM AND A SEWER, OR APPURTENANCE THERETO WHICH WOULD PERMIT THE PASSAGE OF ANY WASTEWATER OR POLLUTED WATER SUPPLY.
13. PRESSURE TESTING (SECTION 02704), DISINFECTION (SECTION 02675), AND BACTERIOLOGICAL TESTING (SECTION 02675) SHALL BE SUCCESSFULLY COMPLETED BY CONTRACTOR AND APPROVED BY ENGINEER PRIOR TO TRANSFER OF ANY SERVICES TO NEW MAIN.
14. CONTRACTOR SHALL CONFIRM RECONNECTION OF WATER SERVICES TO ALL PROPERTIES PRIOR TO REMOVAL OF TEMPORARY BYPASS WATER MAIN.
15. WATER MAIN OUTSIDE OF THE LIMIT OF THE PROPOSED TRENCH SHALL BE ABANDONED IN ACCORDANCE WITH SPECIFICATION SECTION 02050.

LEGEND

EXISTING:

- FIRE HYDRANTS
- UTILITY POLE
- CATCH BASIN
- SEWER MANHOLE
- DRAIN MANHOLE
- LIGHT POLE
- GAS VALVE
- SIGN
- WATER VALVE
- DRAIN LINE
- WATER MAIN
- SEWER LINE
- EDGE OF PAVEMENT
- GAS LINE
- OVERHEAD WIRE
- EXISTING WATER MAIN TO BE ABANDONED
- BUSH LINE HEDGE
- CONCRETE WALL
- BUILDING
- STONE WALL
- 1000+00 1000+25 BASELINE
- TEST PIT
- WETLAND FLAG/EDGE OF WETLAND
- 30' NO DISTURBANCE AREA
- 100' WETLANDS BUFFER

PROPOSED:

- WATER MAIN
- WATER MAIN END CAP
- WATER GATE VALVE
- WATER MAIN BEND
- NEW HYDRANT, GATE VALVE AND ANCHOR TEE
- WATER MAIN REDUCER
- STRAW WATTLES
- WATER SERVICE AND CURB STOP

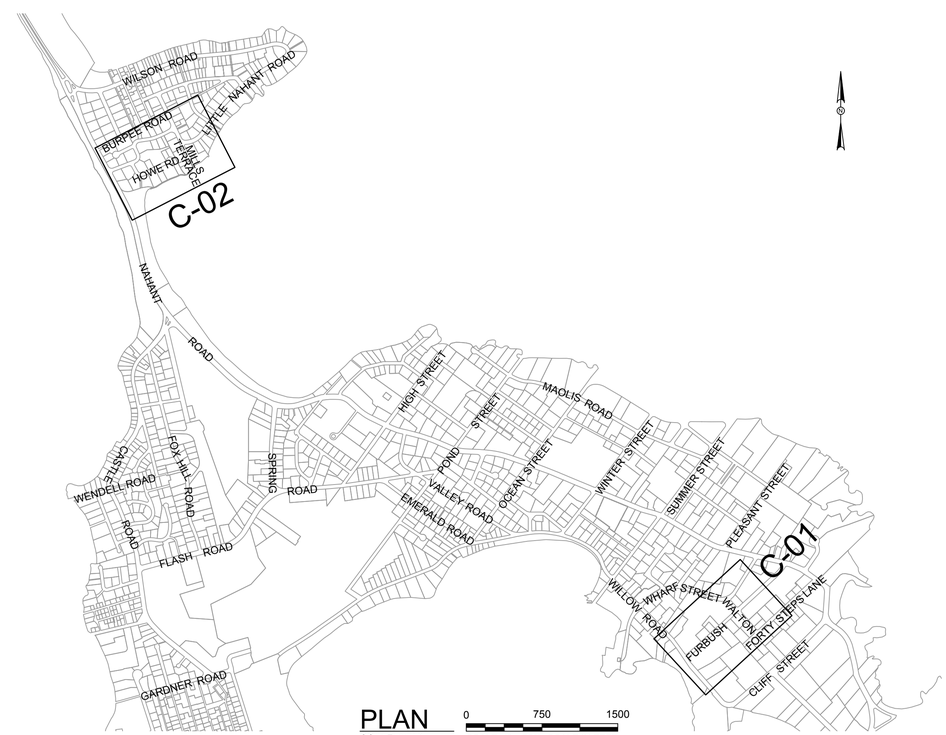

PLAN
SCALE: 1:750

0 750 1500
SCALE: 1" = 750' SCALE IN FEET

KLEINFELDER
Bright People. Right Solutions.

Scale	AS NOTED
Date	APRIL 2020
Job No.	
Designed by	DAJ
Drawn by	DAJ
Checked by	LAN
Approved by	LAN

No.	Description	Date

REVISIONS

Client: TOWN OF NAHANT, MASSACHUSETTS

Project: 2020 WATER MAIN IMPROVEMENTS

Drawing: GENERAL NOTES, LEGENDS AND KEY PLAN

Sheet: G-01

PLOT DATE=4/6/2020 2:00:44 PM USER=DORIS JENKINS FILENAME=G:_clients\Nahant MA\Water Mains Project 2020\Drawings\General\Nahant_Legend and notes.dwg

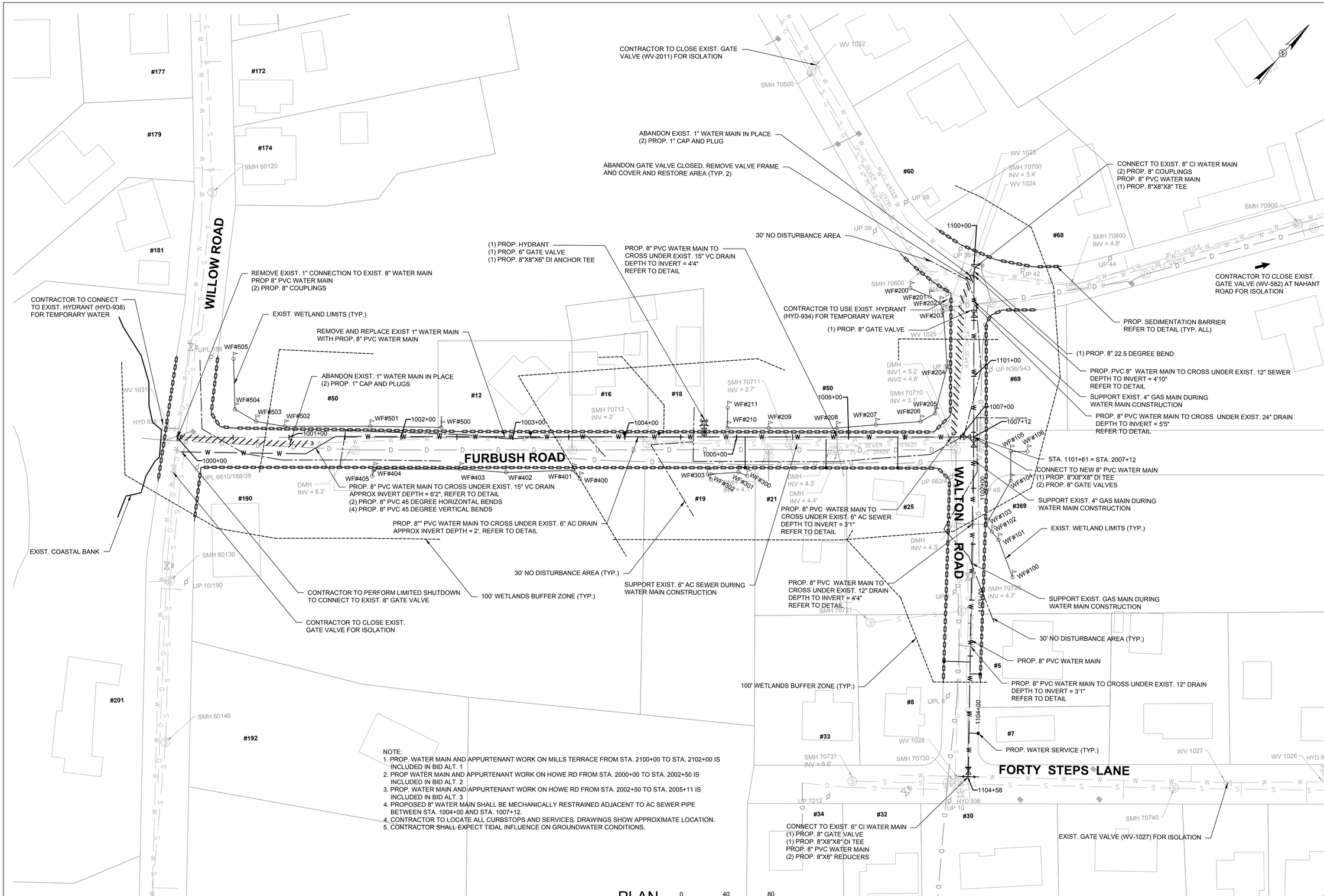

PLAN
SCALE: 1" = 40'

0 40 80
SCALE: 1" = 40' SCALE IN FEET

KLEINFELDER
Bright People. Right Solutions.

LAURA A. NOLAN NO. 45701 COMMONWEALTH OF MASSACHUSETTS PROFESSIONAL ENGINEER

No.	Description	Date
	REVISIONS	

Scale	AS NOTED
Date	APRIL 2020
Job No.	
Designed by	DAJ
Drawn by	DAJ
Checked by	LAN
Approved by	LAN

Client: TOWN OF NAHANT, MASSACHUSETTS

Project: 2020 WATER MAIN IMPROVEMENTS

Drawing: FURBUSH RD (STA. 1000+00 TO 1007+12) AND WALTON RD (STA. 1100+00 TO 1104+58)

Sheet: C-01

PLOT DATE=4/6/2020 2:01:05 PM USER=DORIS JENKINS FILENAME=G:_clients\Nahant MA\Water Mains Project 2020\Drawings\Civil\2020 Water Main Improvements Design_40scale.dwg

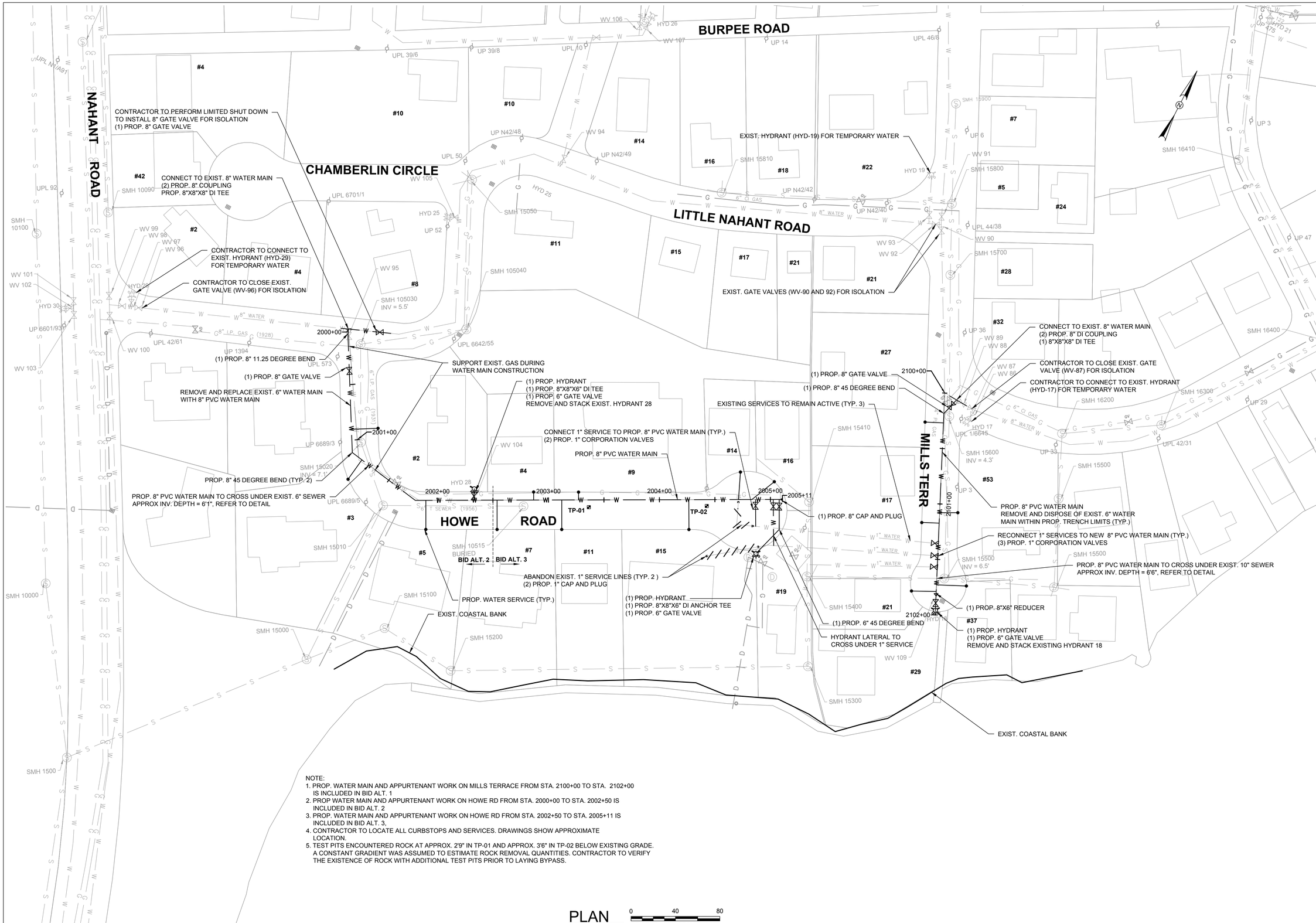

NOTE:
1. PROP. WATER MAIN AND APPURTENANT WORK ON MILLS TERRACE FROM STA. 2100+00 TO STA. 2102+00 IS INCLUDED IN BID ALT. 1
2. PROP WATER MAIN AND APPURTENANT WORK ON HOWE RD FROM STA. 2000+00 TO STA. 2002+50 IS INCLUDED IN BID ALT. 2
3. PROP. WATER MAIN AND APPURTENANT WORK ON HOWE RD FROM STA. 2002+50 TO STA. 2005+11 IS INCLUDED IN BID ALT. 3.
4. CONTRACTOR TO LOCATE ALL CURBSTOPS AND SERVICES. DRAWINGS SHOW APPROXIMATE LOCATION.
5. TEST PITS ENCOUNTERED ROCK AT APPROX. 2'9" IN TP-01 AND APPROX. 3'6" IN TP-02 BELOW EXISTING GRADE. A CONSTANT GRADIENT WAS ASSUMED TO ESTIMATE ROCK REMOVAL QUANTITIES. CONTRACTOR TO VERIFY THE EXISTENCE OF ROCK WITH ADDITIONAL TEST PITS PRIOR TO LAYING BYPASS.

PLAN
SCALE: 1" = 40'

0 40 80
SCALE: 1" = 40' SCALE IN FEET

KLEINFELDER
Bright People. Right Solutions.

LAURA A. NOLAN NO. 48701 COMMONWEALTH OF MASSACHUSETTS

No.	Description	Date
	REVISIONS	

Scale	AS NOTED
Date	APRIL 2020
Job No.	
Designed by	DAJ
Drawn by	DAJ
Checked by	LAN
Approved by	LAN

Client: TOWN OF NAHANT, MASSACHUSETTS

Project: 2020 WATER MAIN IMPROVEMENTS

Drawing: HOWE RD (STA. 2000+00 TO 2005+11) AND MILLIS TER (STA. 2100+00 TO 2102+00)

Sheet: C-02

PLOT DATE=4/6/2020 2:01:10 PM USER=DORIS JENKINS FILENAME=G:_clients\Nahant MA\Water Mains Project 2020\Drawings\Civil\2020 Water Main Improvements Design_40scale.dwg

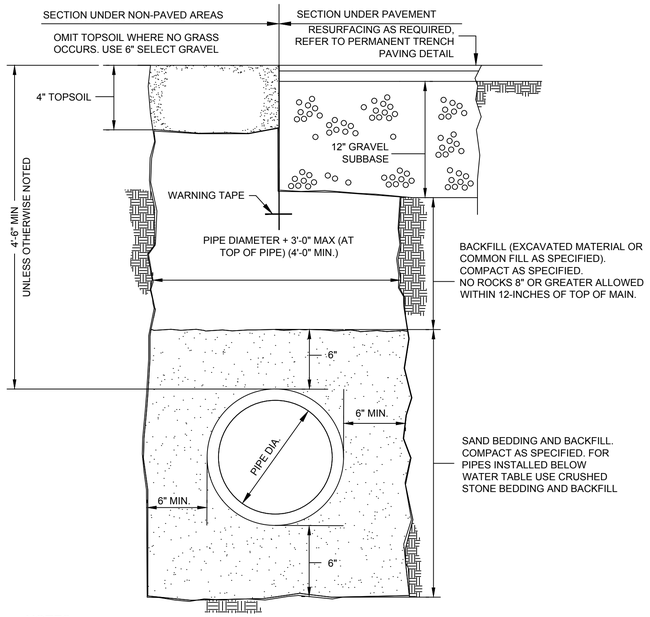

NOTES:

1. FOR LOCATIONS WHERE LEDGE IS ENCOUNTERED, SAND BEDDING SHALL BE MINIMUM OF 6" THICK UNDER PIPE.
2. FILL MATERIAL SHALL BE COMPACTED TO 95% PROCTOR DENSITY.

TYPICAL TRENCH DETAIL

SCALE: N.T.S.

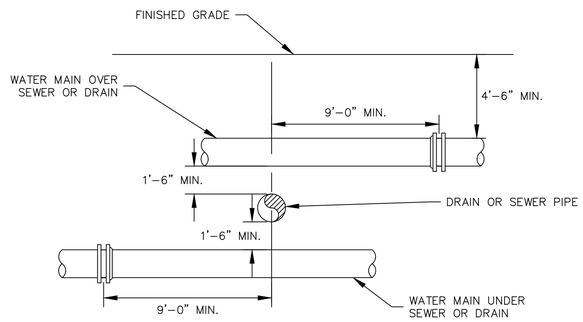

NOTE: DETAIL DOES NOT APPLY TO CROSSING HOUSE SERVICE CONNECTIONS.

WATER MAIN CROSSING WITH SEWER OR DRAIN

SCALE: N.T.S.

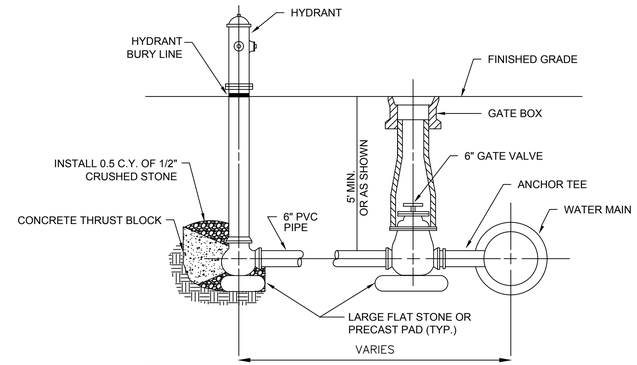

NOTE:

1. ALL HYDRANT, VALVE AND TEE JOINTS TO BE MECHANICALLY RESTRAINED JOINTS.
2. INSTALL CONCRETE THRUST BLOCK BEHIND HYDRANT.
3. HYDRANT TO BE SET ATLEAST 18" BEHIND FACE OF CURB OR EDGE OF PAVEMENT

HYDRANT SETTING DETAIL

SCALE: N.T.S.

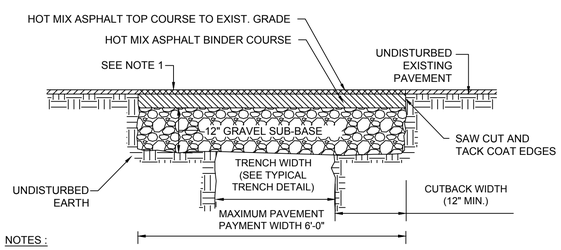

NOTES :

1. REFER TO SPECIFICATION 02500.
2. TRENCH SHALL BE BACKFILLED AT THE END OF EACH WORKING DAY. CONTRACTOR TO PLACE 2.5" HOT MIX ASPHALT BINDER COURSE FOLLOWING BACKFILL AND SUCCESSFUL TESTING OF WATER MAIN
3. FOLLOWING SETTLEMENT PERIOD, CONTRACTOR TO PLACE 1.5" HOT MIX ASPHALT TOP COURSE.
4. ALLOWABLE TRENCH WIDTH FOR MEASUREMENT AND PAYMENT OF PAVEMENT REPAIR SHALL BE PIPE DIAMETER + 3'0" (48" MIN)

PERMANENT TRENCH PAVING DETAIL

SCALE: N.T.S.

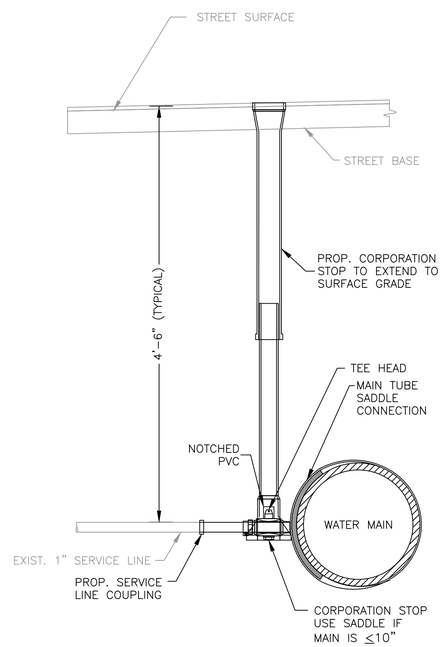

1" CORPORATION VALVE

SCALE: N.T.S.

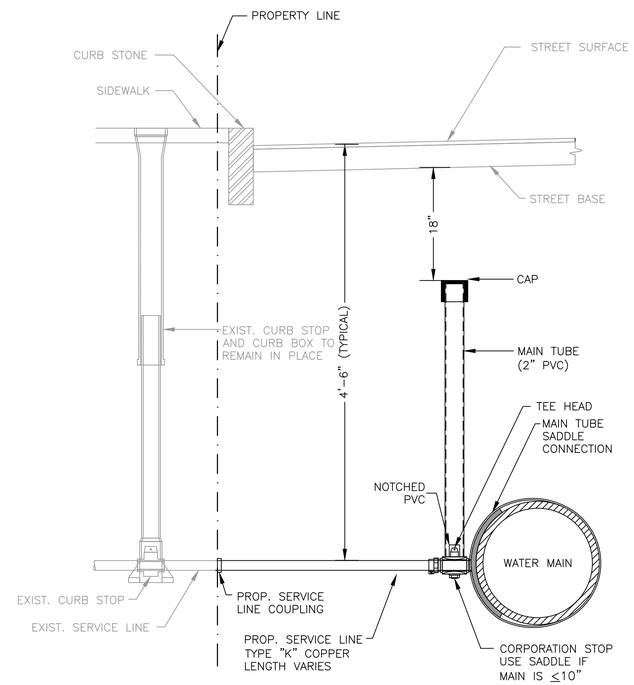

TYPICAL WATER SERVICE CONNECTION

SCALE: N.T.S.

KLEINFELDER
Bright People. Right Solutions.

COMMONWEALTH OF MASSACHUSETTS
LAURA A. NOLAN
No. 47861
REGISTERED PROFESSIONAL ENGINEER
07/16/20

No.	Description	Date
	REVISIONS	

Scale	AS NOTED
Date	APRIL 2020
Job No.	
Designed by	DAJ
Drawn by	DAJ
Checked by	LAN
Approved by	LAN

Client: TOWN OF NAHANT, MASSACHUSETTS

Project: 2020 WATER MAIN IMPROVEMENTS

Drawing: DETAIL SHEET 1

Sheet: D-01

PLOT DATE=4/6/2020 2:01:45 PM USER=DORIS JENKINS FILENAME=G:_clients\Nahant MA\Water Mains Project 2020\Drawings\General\Nahant_Details.dwg

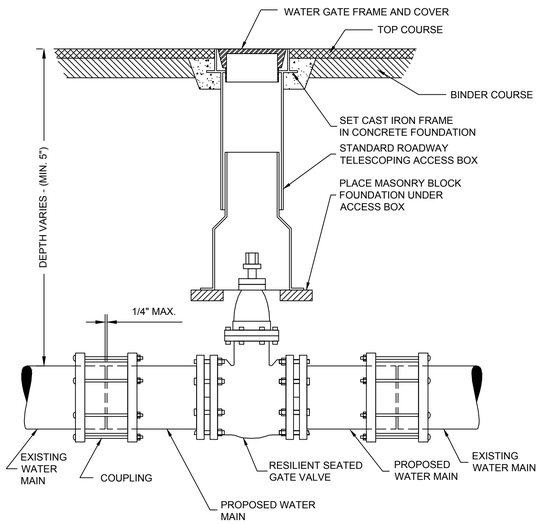

TYPICAL VALVE DETAIL

SCALE: N.T.S.

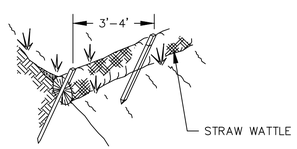

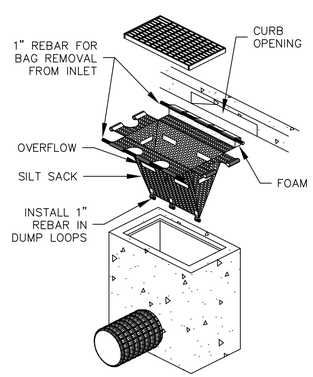

NOTES FOR EROSION CONTROL:

1. STRAW WATTLE INSTALLATION REQUIRES THE PLACEMENT AND SECURE STAKING OF THE ROLL IN A TRENCH, 3"–5" DEEP, DUG ON CONTOUR. RUNOFF MUST NOT BE ALLOWED TO RUN UNDER OR AROUND WATTLE.
2. STRAW WATTLES MUST BE PLACED ALONG SLOPE CONTOURS.
3. ADJACENT WATTLES MUST TIGHTLY ABUT.
4. CONTRACTOR SHALL REMOVE SEDIMENT AS NECESSARY TO MAINTAIN LEVEL BELOW OVERFLOW HOLES IN SILT SACK.
5. SILT SACK SHALL BE USED ON EXISTING CATCH BASINS WITHIN THE 100' WETLAND BUFFERS INDICATED ON THE DRAWINGS.
6. CONTRACTOR IS RESPONSIBLE FOR MAINTAINING SEDIMENTATION BARRIERS THROUGHOUT THE DURATION OF THE PROJECT.
7. CONTRACTOR SHALL REMOVE AND LEGALLY DISPOSE OF SEDIMENT AS REQUIRED.
8. CONTRACTOR SHALL REMOVE SILT SACKS AND STRAW WATTLES AND LEGALLY DISPOSE OF THEM OFF–SITE, UPON COMPLETION OF THE PROJECT AND AS REQUIRED.

EROSION CONTROL DETAIL: SILT SACK AND STRAW WATTLE

SCALE: N.T.S.

KLEINFELDER
Bright People. Right Solutions.

COMMONWEALTH OF MASSACHUSETTS
LAURA NOLAN CIVIL No. 49001
Registered Professional Engineer
07-06-2020

No.	Description	Date

REVISIONS

Scale	AS NOTED
Date	APRIL 2020
Job No.	
Designed by	DAJ
Drawn by	DAJ
Checked by	LAN
Approved by	LAN

Client: TOWN OF NAHANT, MASSACHUSETTS

Project: 2020 WATER MAIN IMPROVEMENTS

Drawing: DETAIL SHEET 2

Sheet: D-02

PLOT DATE=4/6/2020 2:01:46 PM USER=DORIS JENKINS FILENAME=G:_clients\Nahant MA\Water Mains Project 2020\Drawings\General\Nahant_Details.dwg